TORQUE USA

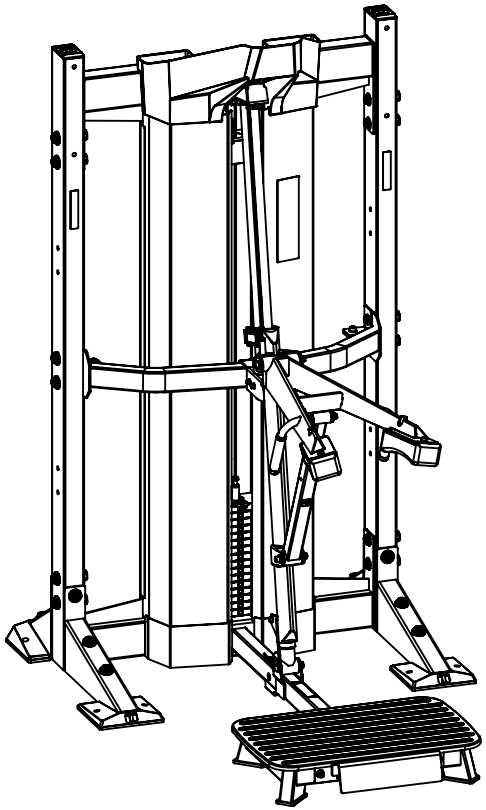

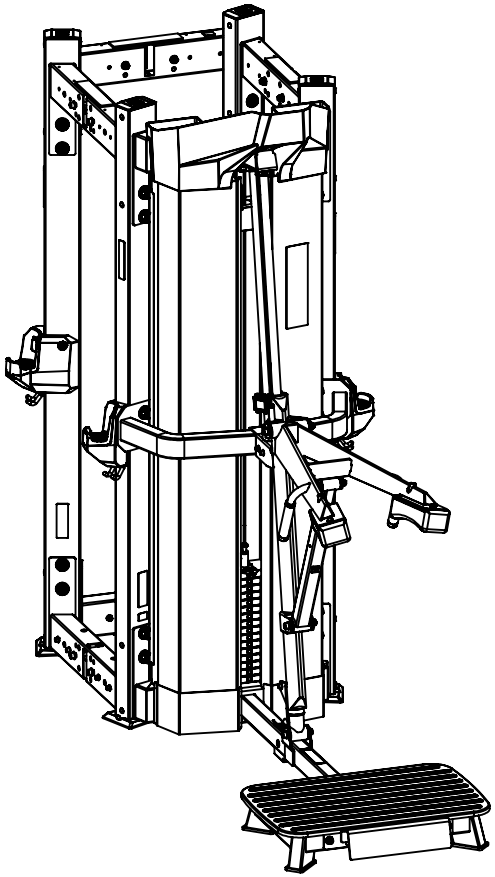

ASSEMBLY INSTRUCTIONS

SQUAT MODULE / STATION

VERSION: XCREATE-4SQUATM, XCREATE-OSS-SQUAT

PART # 6062601-C

WARNING !

Important safety instructions for using Equipment

There is a risk assumed by the individuals who use this type of equipment. To minimize risk, you must follow these precautions:

1. **READ ALL INSTRUCTIONS AND WARNING LABELS COMPLETELY PRIOR TO ANY USE OR ASSEMBLY. Failure to read and follow the safety instructions and warnings within the Assembly and Maintenance Guide may result in possible serious injury or death. Use this product only for the intended uses described in the Assembly and Maintenance Guide and exercise booklet. DO NOT** modify equipment in anyway. **Any use other than as intended or modification of product will void any and all product warranties.**
2. Consult your physician before starting any exercise program. Warm up properly before engaging in resistance training. Stop exercising and consult a physician immediately if you experience dizziness, nausea, faintness, chest pain, shortness of breath or any other abnormal symptoms during use of this equipment.
3. Certain exercise equipment and/or equipment may not be suitable or appropriate for pregnant women, people with heart conditions, balance impairment or other pre-existing health problems. Persons with disabilities should consult a physician and obtain medical approval prior to using this product and should only use this product under close supervision. **Failure to comply with these instructions will void any and all product warranties.**
4. Carefully inspect equipment before each use. Replace all parts at the first sign of wear or damage. Tighten all loose connections. Pay special attention to cable ends and connections. Do not disassemble, remove any parts or components or otherwise attempt to repair this product. **DO NOT** use product if product appears damaged. **DO NOT** attempt to fix a broken or jammed machine, obtain assistance from your authorized Torque Fitness Dealer. **Failure to comply with these instructions will void any and all product warranties.**
5. Keep body and clothing clear of all moving parts. Do not put any foreign on or near this product when in use. Wear comfortable clothing which does not impair freedom of movement. Do not wear clothing which is too loose and could get caught in moving parts.
6. Make sure all adjustment spring pins are fully engaged after making an adjustment and before using the product.
7. Make sure weight stack selector pin is completely inserted into the weight stack before beginning any exercise.
8. Children and pets must not be allowed near this machine. Supervise teenagers. This product is not a toy. Owner must notify any user of all warnings and proper use of equipment.
9. This product is designed for Class S, Studio or Commercial indoor use only. Unless directly specified, the maximum user weight is 300 lb (136 kg). If unsure of proper use of this product, contact Torque Fitness Customer service at: **763-754-7533** (8:30 am - 5:00 pm CST) or email **service@torquefitness.com**

Important Safety Instructions for Assembling Equipment

1. **Assistance is required. Torque Fitness recommends using more than one person to assemble this equipment.**
2. This product must be assembled on a flat, level surface to assure its proper function. Locate the unit a few inches from walls or furniture to allow easy access during assembly and use.
3. Read each numbered step in Assembly and Maintenance Guide and follow the steps in sequence. Skipping ahead may result in damage to the equipment and may require components to be disassembled.
4. Wear proper attire during the assembly process. Do not wear clothing which is too loose or open toed shoes.

Obtaining Service

Do not attempt to service the product yourself except for maintenance tasks described in this manual.

Refer to the Adjustments and Maintenance section at the back of this manual and the included workout booklet for information on product operation and service.

For further information, visit our website at **www.torquefitness.com** or contact us at **service@torquefitness.com**

If you call or email customer service, have the model number and serial number(s) available. The location of the model and serial numbers are indicated in the back of this manual. For future reference, write the model and serial number(s) in the space below.

Model Number:_____

Serial Number(s):_____

Torque Fitness
11201 Xeon Street NW Suite 101
Coon Rapids, MN USA 55448

GENERAL NOTES

CAUTION: More than one person is required to assemble this unit. Do not attempt to assemble by yourself.

Unpacking the Equipment

This product may be packaged and shipped in multiple boxes. Parts from all of the boxes are required for various steps during the assembly process.

Carefully open each box and arrange all the parts near the area where assembly is to take place.

CAUTION: Use extreme care when cutting plastic tie wraps and package banding. A wire cutter works best for protecting yourself and the parts.

CAUTION: Some of the internal boxes may contain upholstery. Do not use a utility knife to open any boxes or the pads may be damaged.

The hardware is packed in bags. Carefully open each bag and sort them per parts list on the next page.

Before starting assembly, identify each part and hardware item as listed in the parts list on the next page. If any items are missing, contact Torque Fitness Customer service at: **763-754-7533** or **service@torquefitness.com**

Note: Some items listed in the parts list may be pre-installed on the product.

Tools Required

- 3/8" Allen wrench
- 5/16" Allen wrench
- 3/16" Allen wrench
- 3/4" Wrench and or scocket
- 9/16" Wrench and or socket
- 1/2" Wrench and or socket
- Rubber mallet
- Wire snips (to cut plastic tie wraps)
- Scissors or utility knife (to cut hardware bags)
- Step stool or ladder
- Tape measure

Optional Equipment

Optional equipment may be available for this product.

Follow the instructions included with the optional equipment to assemble it to the base product.

Assembly Tips

- In a continual effort to improve our products, specifications are subject to change.
- A 6" scale is provided at the bottom of this page. To correctly measure the bolts, measure from underneath the bolt head to the end of the bolt as illustrated below.
- Read all notes on each page before beginning that step.
- Some of the items shown in the assembly steps may be pre-assembled.

Assembly Tips Continued

- **Note:** Some items have been hidden for assembly clarity.
- **Note:** Some pre-assembled parts may need to be temporarily removed in order to complete the step. Follow the instructions or damage to the product could occur.
- Some parts may have extra holes that will not be used. Use only the holes depicted in the instructions.
- Certain parts make reference to the right and left side of the machine. In order to determine the left and right side, stand in front of the machine.
- Provide ample space around the product for ease of assembly.
- **DO NOT** fully tighten any connections until instructed to do so. This will help insure that the alignment of all of the parts will be correct.
- Insert all bolts in the direction indicated in the instructions. Failure to do so may result in clearance issues and will degrade the aesthetics of the product.
- Carefully follow instructions for all pivot points. In general, primary rotating parts have connections that should be securely tightened, while secondary connections need to be loosened 1/4 turn.

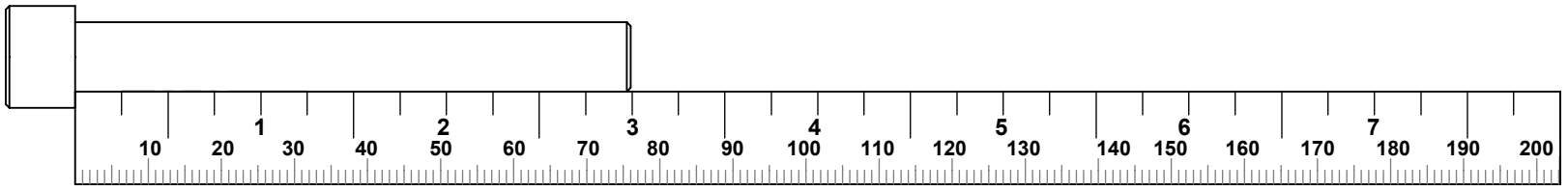

ITEM NO.	PART NUMBER	DESCRIPTION	QTY
1	5915101	WLDMT, CABLE STATION CROSS * (SEE NOTE) *	2
2	5360001	LABEL, SERIAL-MARKING	1
3	2001301	WASHER, FLAT 1/2 SAE ST ZN	22
4	2005816	BOLT, 1/2-13 X 4-1/4" (108mm) SOCKET HEAD	4
5	2001401	NUT, 1/2-13 LK ST ZN	9
6	2001101	WASHER, FLAT 3/8 SAE ST ZN	20
7	2008414	BOLT, 3/8-16 X 3-3/4" (95mm) ST HT SOCKET HEAD	4
8	2001201	NUT, 3/8-16 LK ST ZN	9
9	6053601	GUIDE ROD, SQUAT AND DEADLIFT	1
10	5662901	WLDMT, RIGHT SHROUD BASE	1
11	5662501	WLDMT, LEFT SHROUD BASE	1
12	5643201	GUIDE ROD, 19 DIA X 1912	2
13	56345PA	PTD ASSY, HEAD PLATE	1
14	6088501	GUIDE ROD, ANGLE LIMIT	1
15	60548PA	PTD ASSY, SQUAT AND DEADLIFT PLATFORM	1
16	61014PA	PTD ASSY, 60 LB COUNTERWEIGHT BLOCK	1
17	60523PA	PTD ASSY, GUIDE ROD SUPPORT *** (SEE NOTE)	1 ***
18	6088601	BRKT, GUIDE ROD SUPPORT ** (SEE NOTE)	2 **
19	2005804	BOLT, 1/2-13 X 1-1/4" (32mm) SOCKET HEAD	2
20	60578PA	PTD ASSY, SQUAT BASE	1
21	60582PA	PTD ASSY, SQUAT TOP BOOM	1
22	6058301	CABLE, SQUAT	1
23	6058801	ASSY, SQUAT CARRIAGE	1
24	60602PA	PTD ASSY, SQUAT ADJUSTMENT ARM	1
25	60600PA	PTD ASSY, SQUAT ARM	1
26	60604PA	PTD ASSY, ADJUSTMENT INSERT	1
27	6061501	PAD, SQUAT	2
28	6061401	WLDMT, SQUAT GUIDE ROD TOP RETAINER	1
29	6112901	LABEL, WEIGHT STACK 45 - 345 LB (20.4 - 156.5 KG)	1

ITEM NO.	PART NUMBER	DESCRIPTION	QTY
30	6101701	PLATE, GUIDE ROD SUPPORT COVER - SQUAT	1
31	5094501	PULLEY, 4-1/2 OD X 25	1
32	5770601	BUMPER, SMITH BAR	1
33	2005815	BOLT, 1/2-13 X 4" (102mm) SOCKET HEAD	2
34	2005826	BOLT, 1/2-13 X 6-3/4" (171mm) SOCKET HEAD	1
35	2009402	BOLT, 3/8-16 X 3/4" (19mm) ST HT SOCKET HEAD W/NP	2
36	2006812	BOLT, 1/2-13 X 3-1/4" (83mm) SOCKET HEAD W/NP	4
37	5992401	SHAFT COLLAR, TWO-PIECE CLAMPING	2
38	5996401	BUSHING, GUIDE ROD RETAINER	2
39	2008406	BOLT, 3/8-16 X 1-3/4" (45mm) ST HT SOCKET HEAD	1
40	5513601	CUSHION, WEIGHT STACK	2
41	2035201	COLLAR, 30 ID CLAMPING SHAFT	2
42	5768801	INSERT, GUIDE ROD	2
43	2009404	BOLT, 3/8-16 X 1-1/4" (32mm) ST HT SOCKET HEAD W/NP **	2 **
44	2009409	BOLT, 3/8-16 X 2-1/2" (64mm) ST HT SOCKET HEAD W/NP	2
45	2008411	BOLT, 3/8-16 X 3" (76mm) ST HT SOCKET HEAD	2
46	2002101	WASHER, FLAT 1/4 SAE ST ZN	6
47	2006502	BOLT, 1/4-20 X 1/2" (13mm) SOCKET HEAD W/NP	6
48	55181PA	PTD ASSY, WEIGHT SELECTOR STORAGE PLATE	1
49	2008415	BOLT, 3/8-16 X 4" (102mm) ST HT SOCKET HEAD	2
50	5097301	SLEEVE, CABLE END (P05-0103B)	1
51	5094401	PULLEY, 3-1/2 OD X 25	2
52	6101301	CABLE, SQUAT COUNTERWEIGHT	1
53	6116201	BRKT, COUNTERWEIGHT PULLEY - SQUAT	1
54	6061801	PLACARD, XCREATE-SQUAT-101	1
55	5645101	SHROUD, XCREATE CABLE STATION	2
56	5664701	SHROUD, TOP CAP	1
57	56351PA	PTD ASSY, 20 LB WEIGHT PLATE	15
58	6060801	WLDMT, CALF RAISE	1

NOTE:

BOM above represents the components required for assembly of a standard 4' XCREATE module. For assembling as an OMNI stack station, see items listed below.

* ITEM 1 - Replaced by 60894PA - PTD ASSY, TOWER CABLE STATION CROSS - 140 DEGREE

** Not neccessary for assembly of OMNI station (not included).

*** ITEM 22 - Replaced by 61020PA - PTD ASSY, GUIDE ROD SUPPORT - TOWER

NOTE:

X-CREATE CABLE STATIONS can be customized in many ways. This manual provides instructions for assembling a single stand-alone unit. If you worked with Torque X-Team Design during the purchasing process, please request a Bill of Material Drawing to reference your exact set-up. For assistance, contact sales@torquefitness.com or call (763) 754-7533.

NOTE:

When assembling any X-CREATE CABLE STATIONS that are longer than one module wide, the hardware will be shared between two side-by-side modules. It is recommended to keep all bolt connections loose until all the cable stations have been fully assembled, then securely tighten all frame connections.

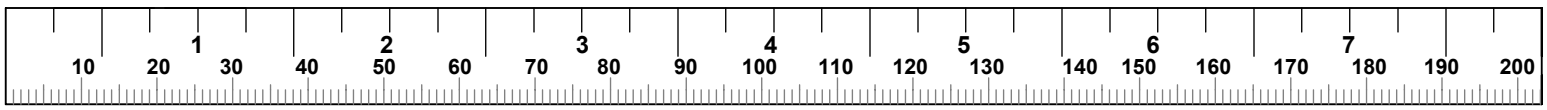

STEP 1A
4' MODULE / OMNI STATION

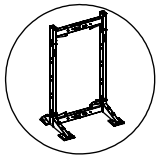

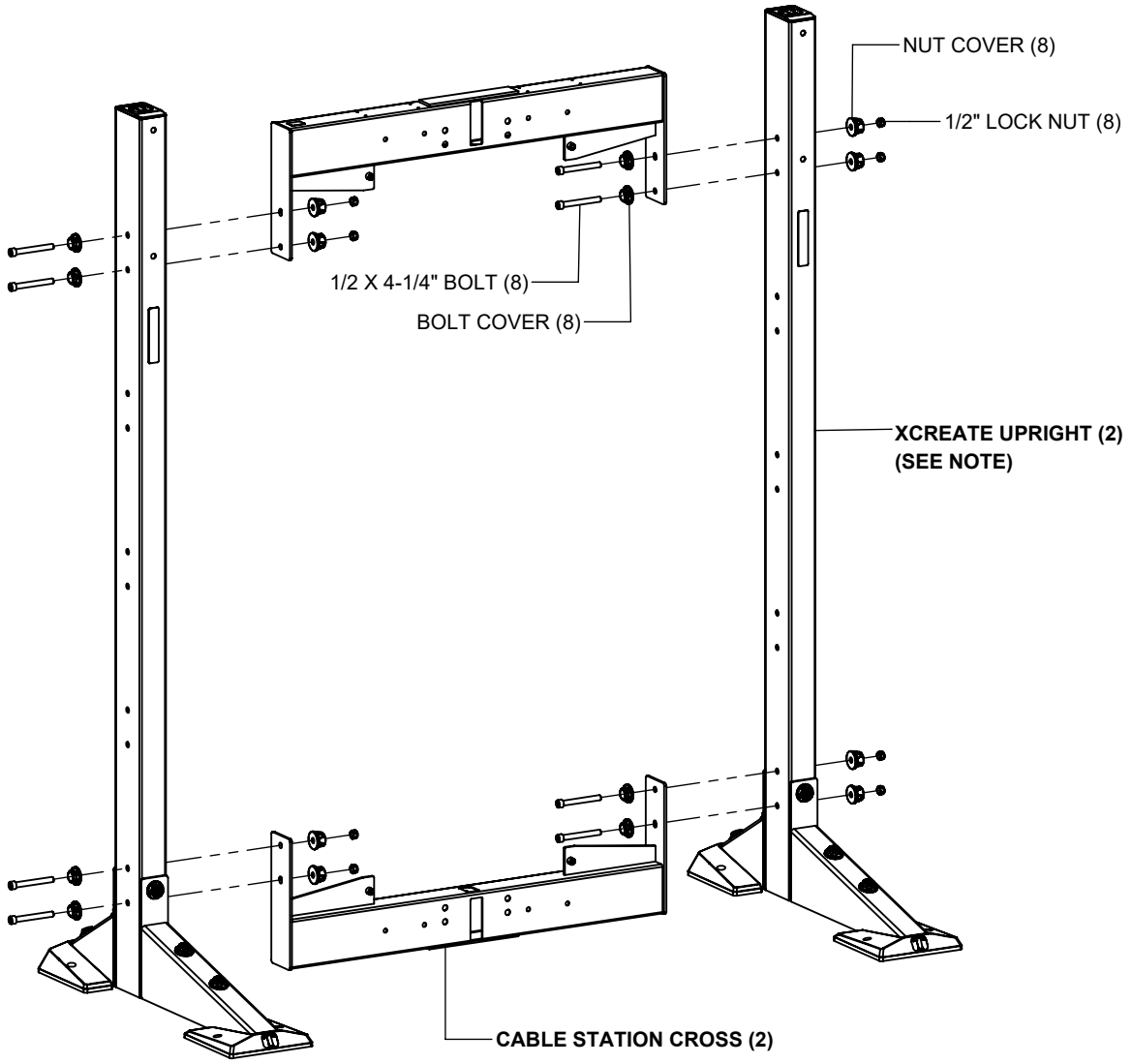

NOTES:

LOOSELY tighten bolt connections in this step.

The XCREATE-4SQUATM is shown assembled to the XCREATE-7U.
However, the XCREATE-4SQUATM can also be assembled to the
XCREATE-8U and XCREATE-2S8U the same way.

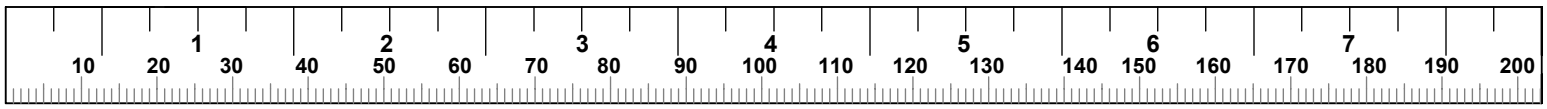

STEP 1B
OMNI STATION

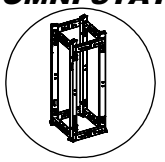

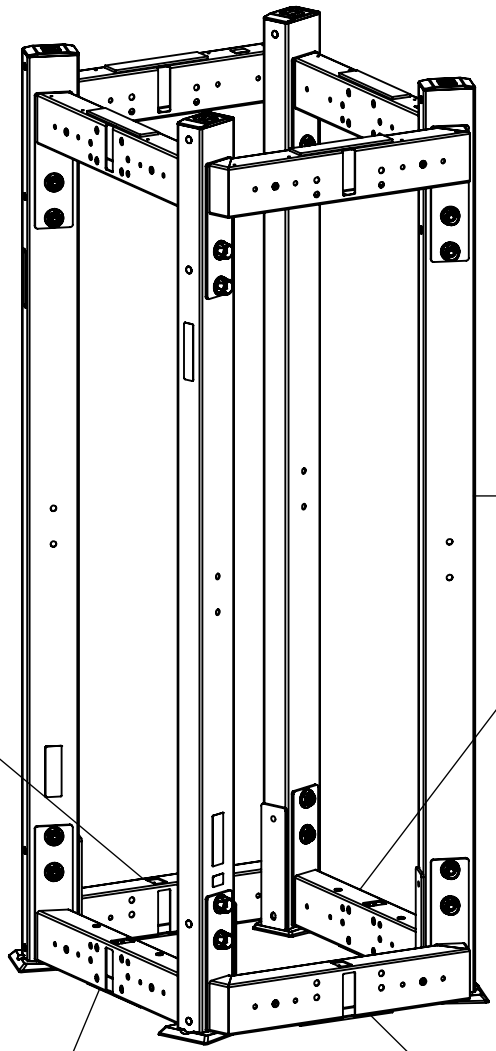

XCREATE-OMNI TOWER

NOTE: SQUAT STATION IS ONLY COMPATIBLE WITH THE CROSSES ON 2 SIDES OF THE UNIT.

NOTE: SQUAT STATION IS **NOT COMPATIBLE WITH THIS SIDE**

NOTE: SQUAT STATION IS **NOT COMPATIBLE WITH THIS SIDE**

NOTE: SQUAT STATION IS ONLY COMPATIBLE WITH THE CROSSES ON 2 SIDES OF THE UNIT.

NOTES:

See the Omni Stack manual for assembling the base unit.

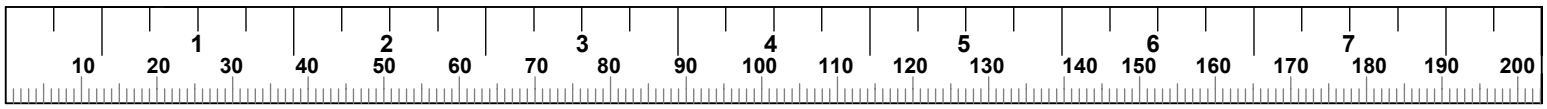

STEP 2
4' MODULE

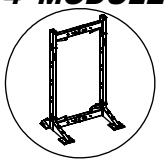

SINGLE 4' MODULE

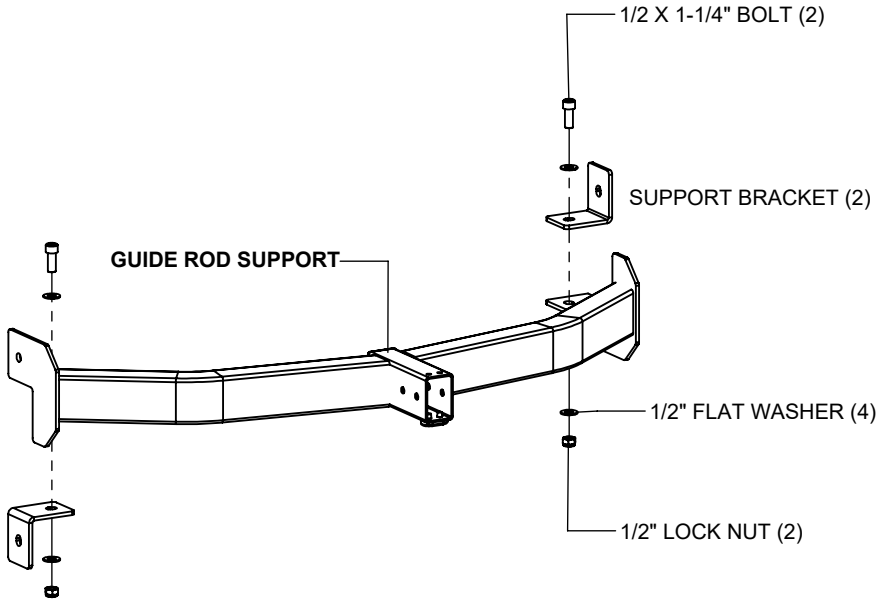

BACK TO BACK, SQUAT AND OR DEADLIFT MODULES

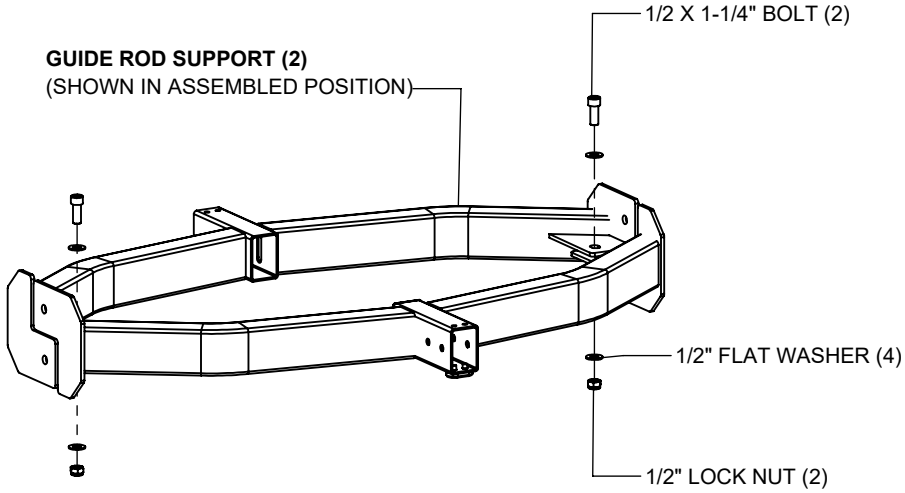

NOTE: SUPPORT BRACKETS MAY BE DISCARDED.

NOTES:

LOOSELY tighten bolt connections in this step.

If assembling the Omnistack station, skip this step.

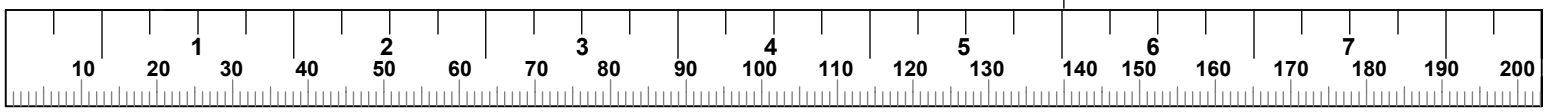

STEP 3
4' MODULE

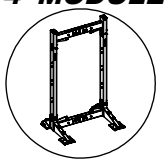

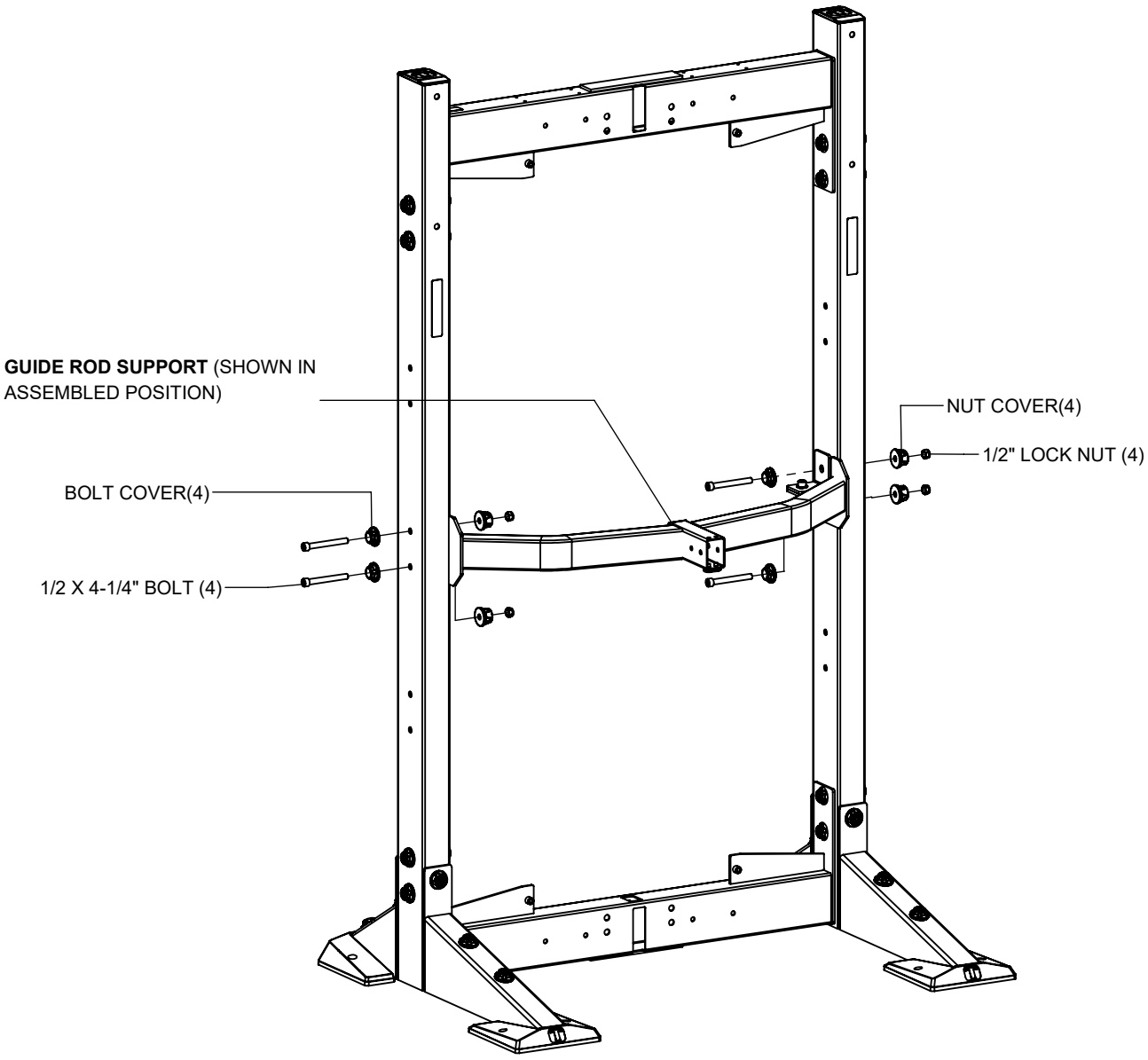

NOTES:

LOOSELY tighten bolt connections in this step.

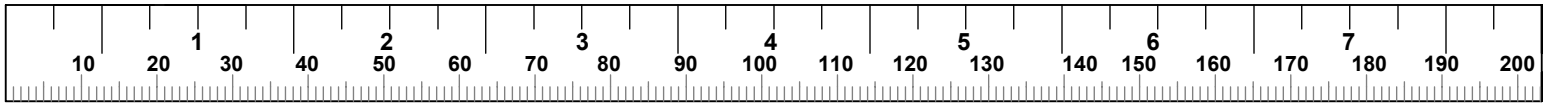

STEP 3B
OMNI STATION

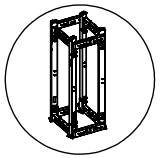

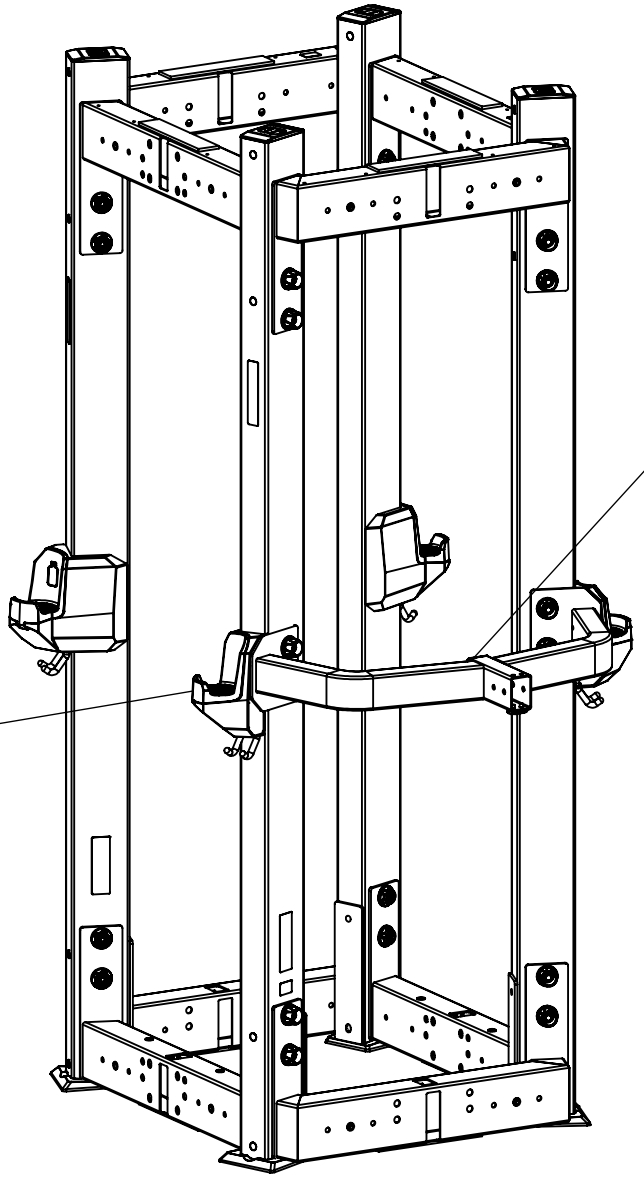

GUIDE ROD SUPPORT (SHOWN IN ASSEMBLED POSITION)

OMNI STACK CUP AND HANGING HOLDERS (SHOWN IN ASSEMBLED POSITION)

NOTE: REFERENCE THE OMNISTACK MANUAL TO COMPLETE THIS STEP. NOTE THAT THE OMNI STACK CUP AND HANGING HOLDERS SHARE HARDWARE WITH THE GUIDE ROD SUPPORT AND MUST BE ASSEMBLED AT THE SAME TIME.

NOTES:

LOOSELY tighten bolt connections in this step.

4' MODULE / OMNI STATION OVERVIEW

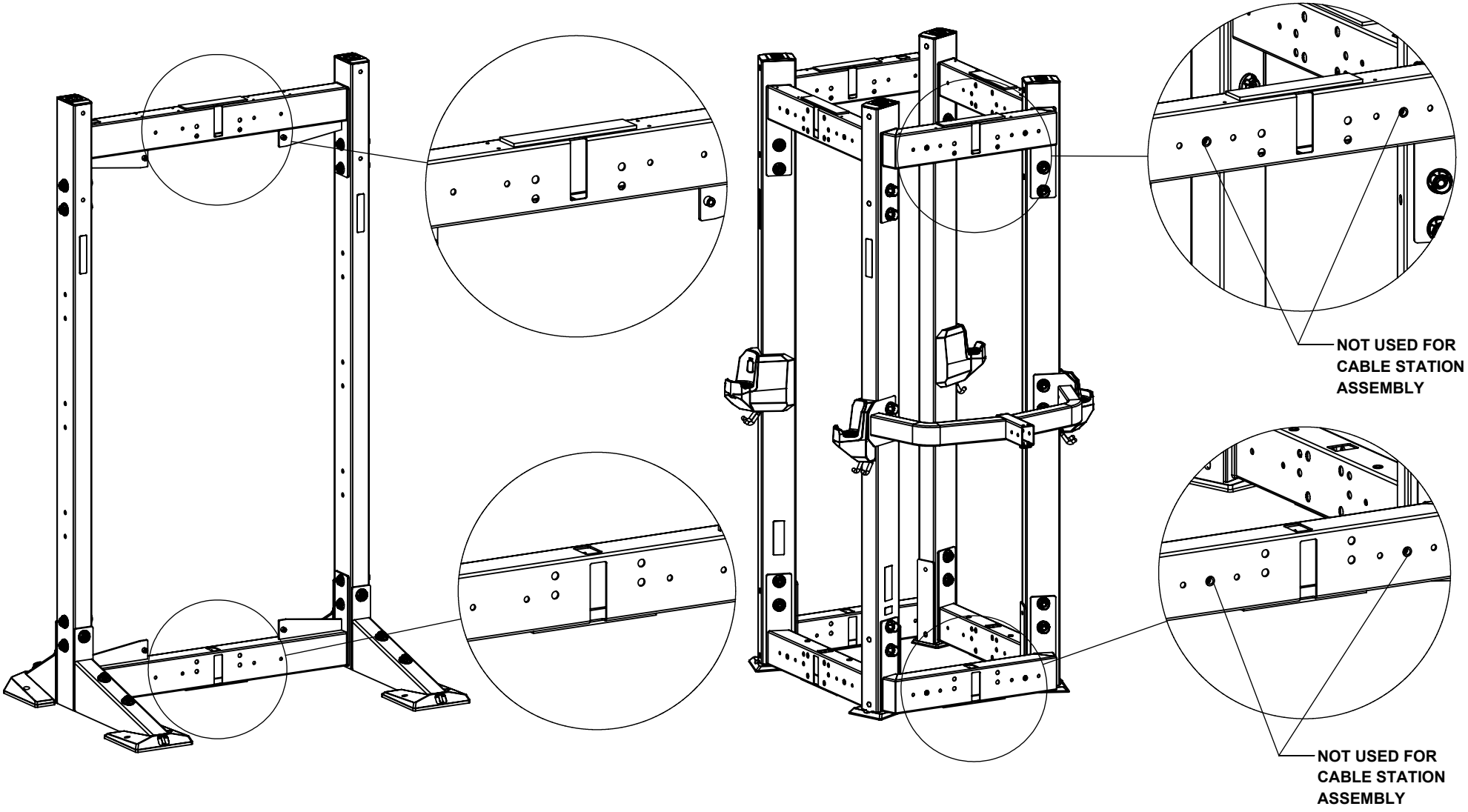

NOTES:

Unless specified otherwise, the remaining steps to assemble the cable station are the exact same to assemble a 4' module or Omni station.

For this assembly guide the remaining steps will only show the XCREATE-4SQUATM configuration. Follow the same steps and same mounting locations for the XCREATE-OSS-SQUAT.

STEP 4
4' MODULE / OMNI STATION

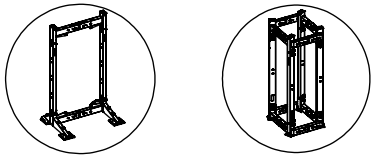

NOTE: 4' MODULE ASSEMBLY IS SHOWN. FOLLOW THE EXACT SAME STEPS TO ASSEMBLE THE OMNI STATION.

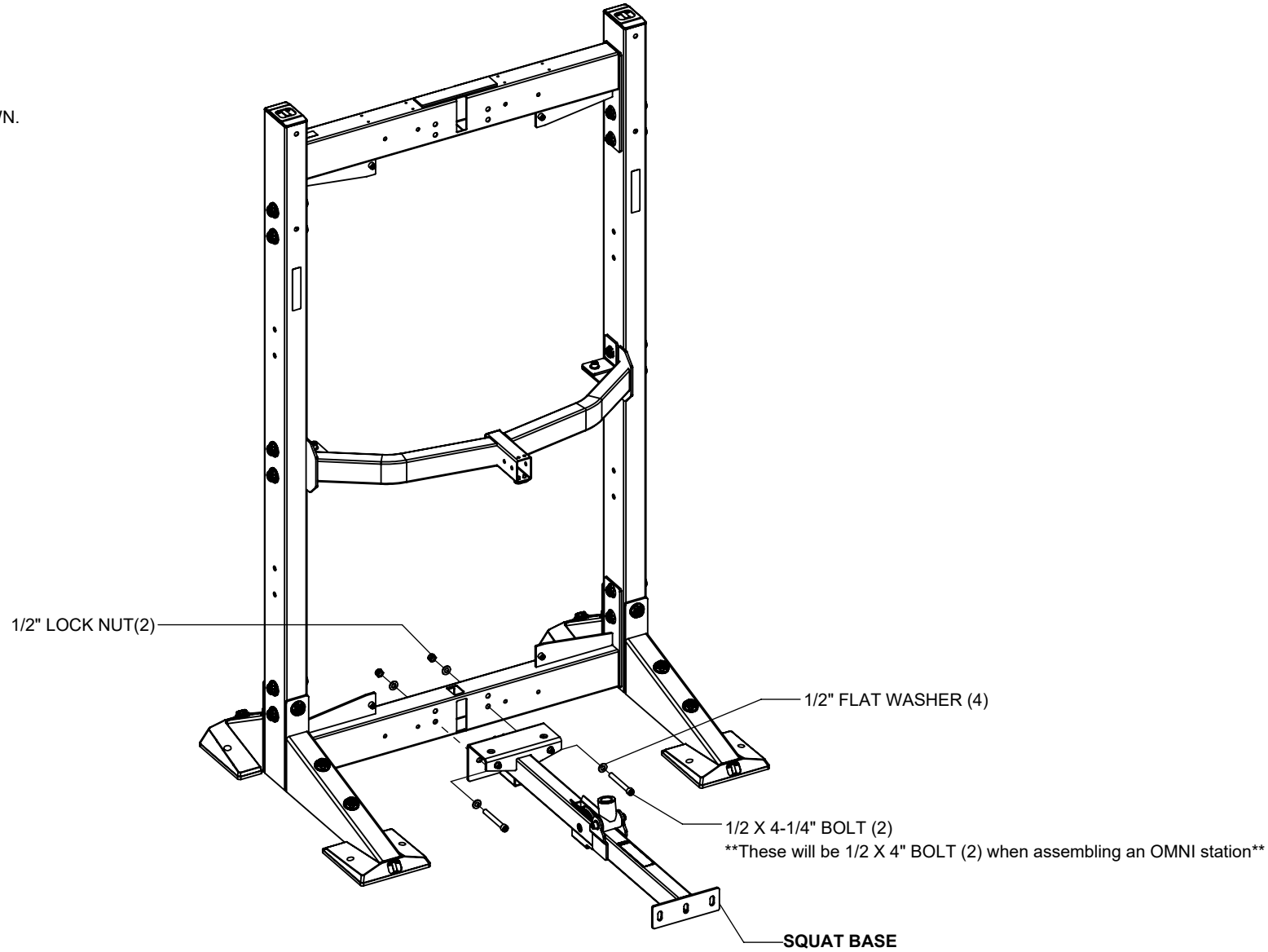

NOTES:

LOOSELY tighten bolt connections in this step.

If assembling a cable station on the back side. Hardware used in this step will be shared, assemble both bases at the same time.

STEP 5a
4' MODULE / OMNI STATION

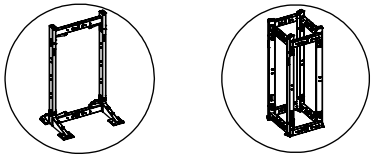

NOTE: 4' MODULE ASSEMBLY IS SHOWN. FOLLOW THE EXACT SAME STEPS TO ASSEMBLE THE OMNI STATION.

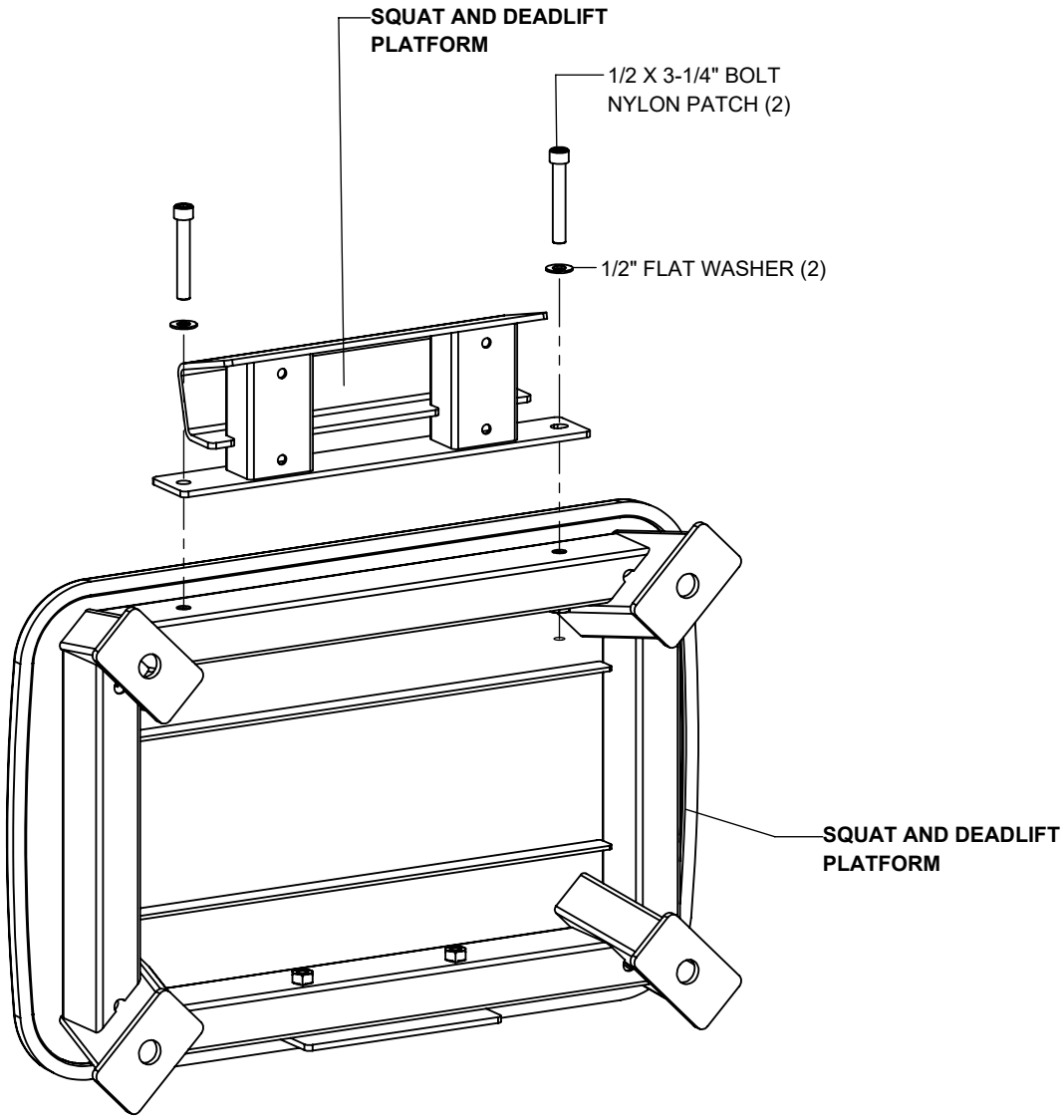

NOTES:

SECURELY tighten bolt connections in this step.

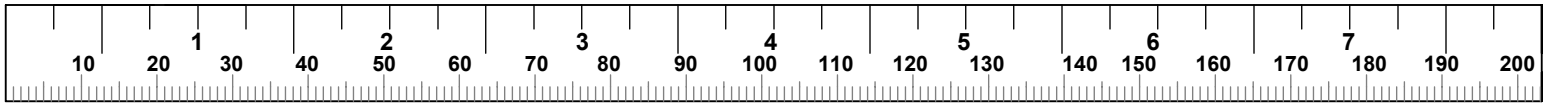

STEP 5b
4' MODULE / OMNI STATION

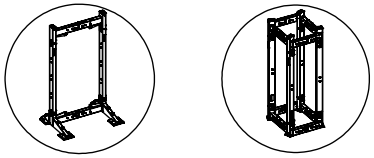

NOTE: 4' MODULE ASSEMBLY IS SHOWN. FOLLOW THE EXACT SAME STEPS TO ASSEMBLE THE OMNI STATION.

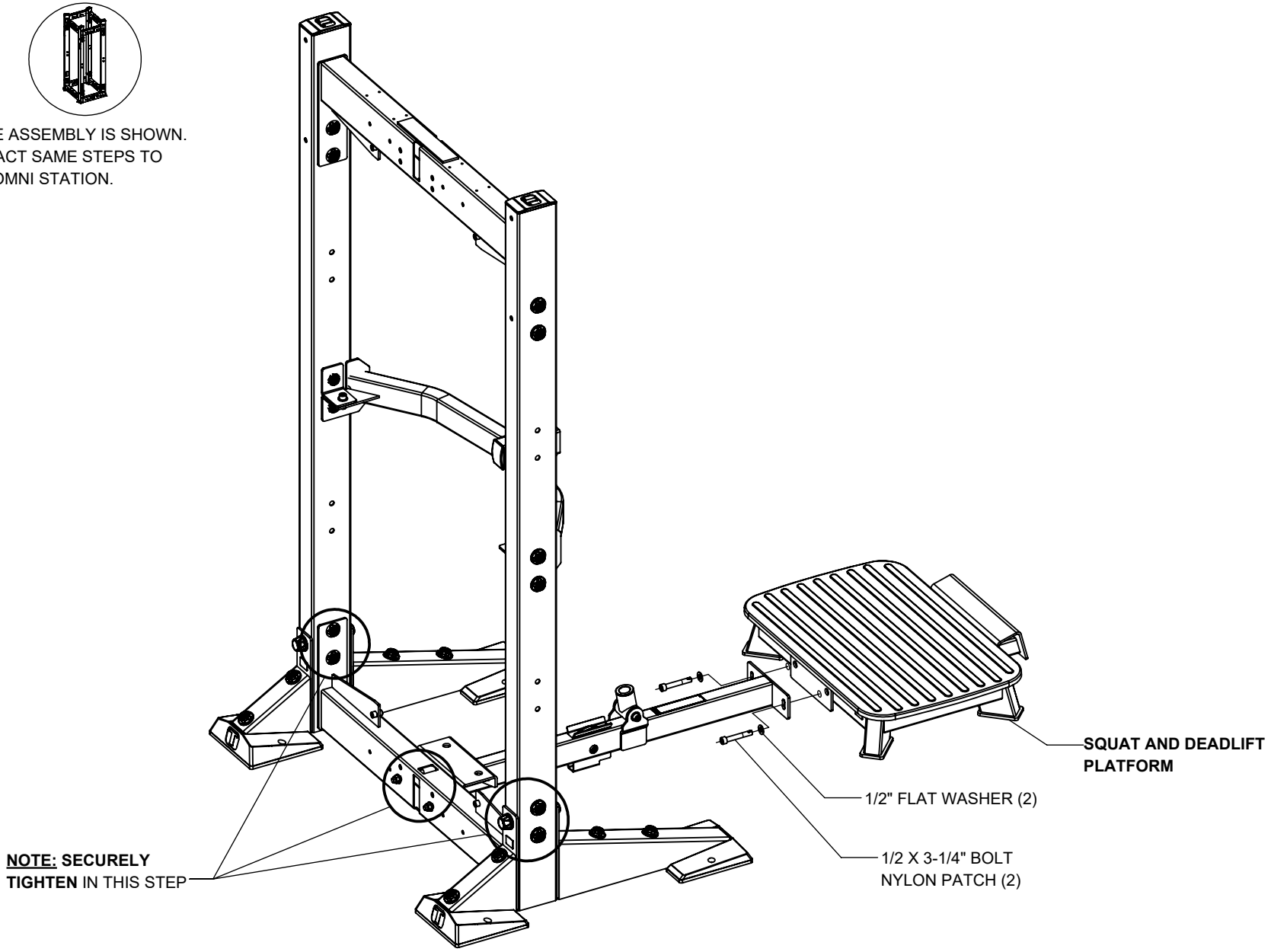

NOTES:

SECURELY tighten bolt connections in this step.

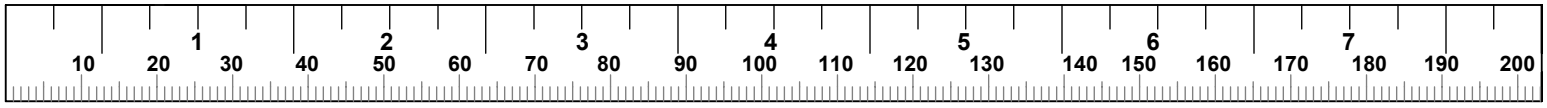

STEP 6
4' MODULE / OMNI STATION

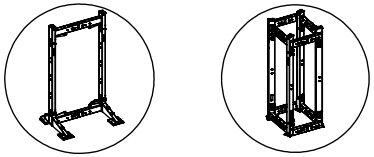

NOTE: 4' MODULE ASSEMBLY IS SHOWN. FOLLOW THE EXACT SAME STEPS TO ASSEMBLE THE OMNI STATION.

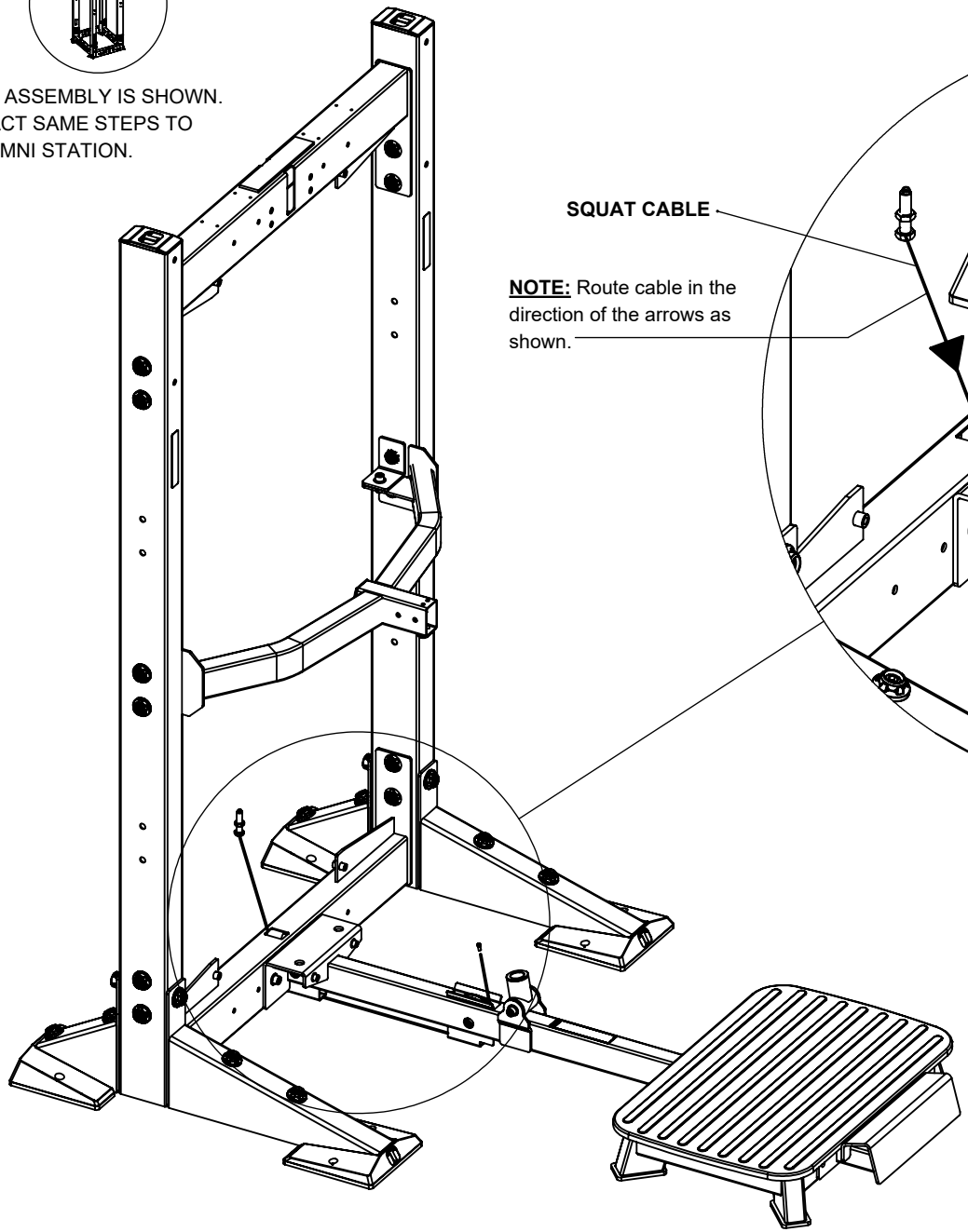

SQUAT CABLE

NOTE: Route cable in the direction of the arrows as shown.

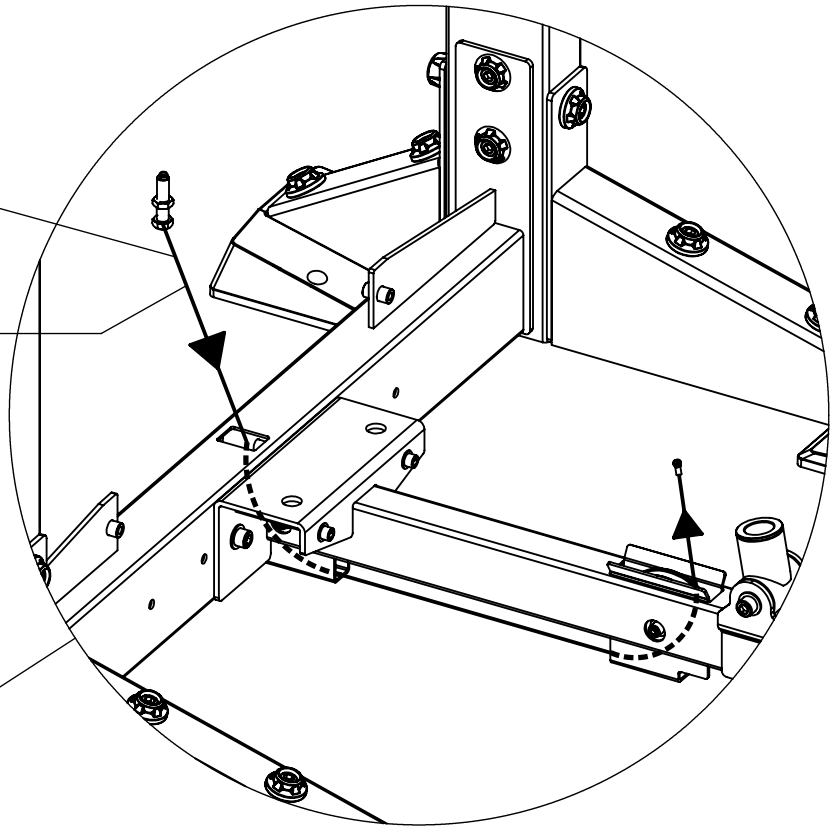

STEP 7
4' MODULE / OMNI STATION

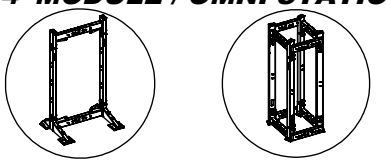

NOTE: 4' MODULE ASSEMBLY IS SHOWN. FOLLOW THE EXACT SAME STEPS TO ASSEMBLE THE OMNI STATION.

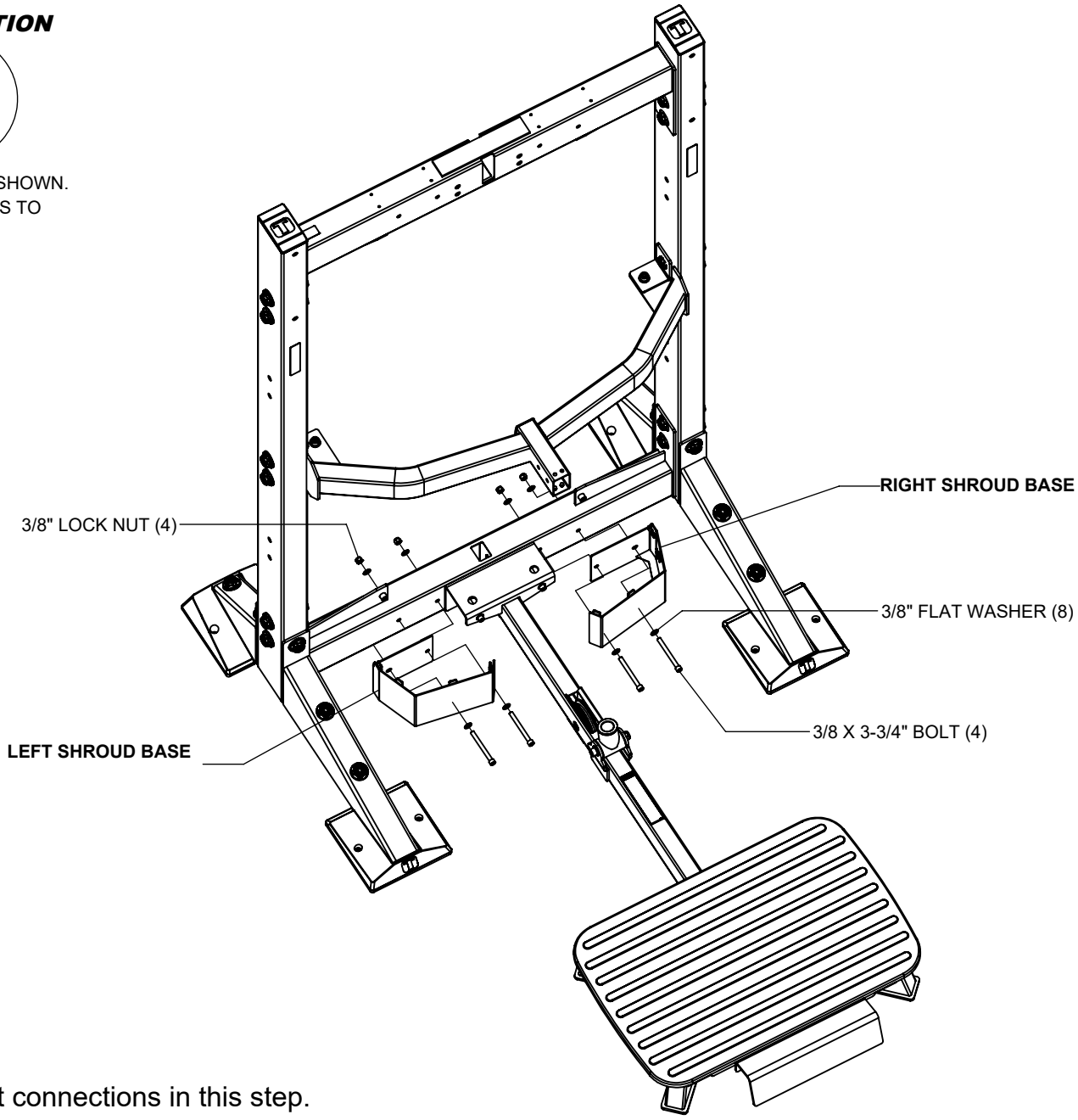

NOTES:

SECURELY tighten bolt connections in this step.

If assembling a cable station on the back side. Hardware used in this step will be shared, assemble all shroud bases at the same time.

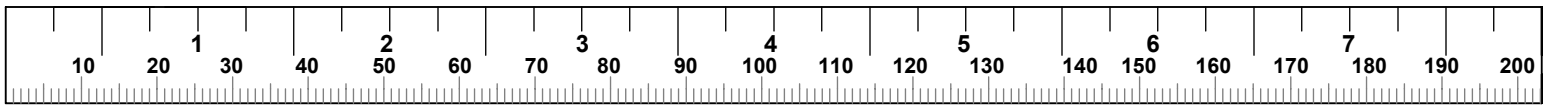

STEP 8
4' MODULE / OMNI STATION

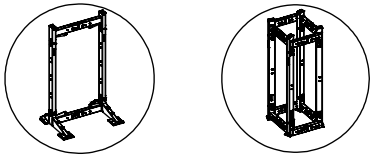

NOTE: 4' MODULE ASSEMBLY IS SHOWN. FOLLOW THE EXACT SAME STEPS TO ASSEMBLE THE OMNI STATION.

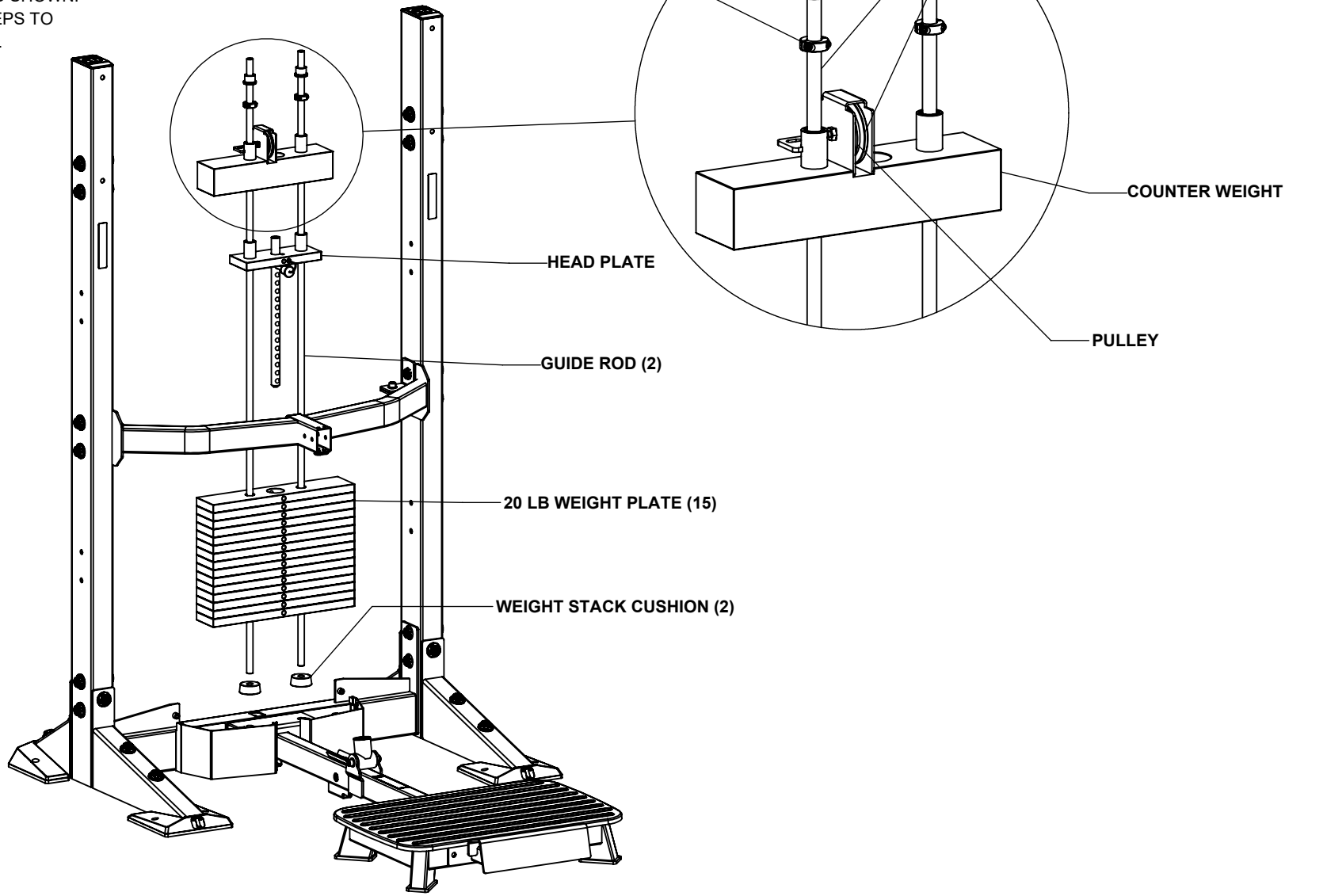

NOTES:

CABLE STATION CROSS has been hidden for assembly clarity.

STEP 9
4' MODULE / OMNI STATION

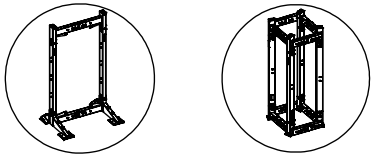

NOTE: 4' MODULE ASSEMBLY IS SHOWN. FOLLOW THE EXACT SAME STEPS TO ASSEMBLE THE OMNI STATION.

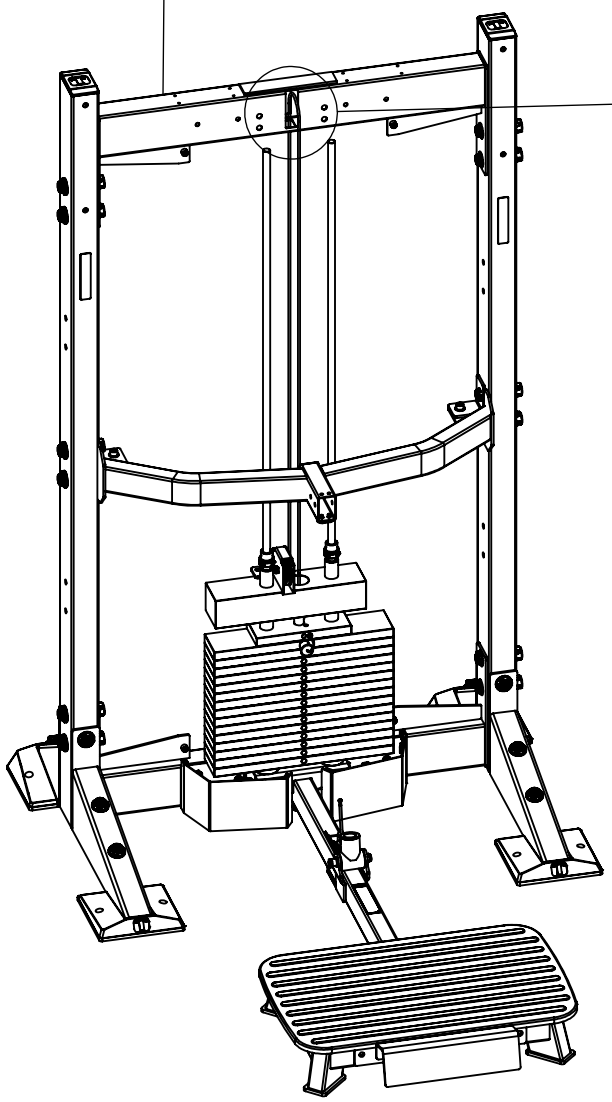

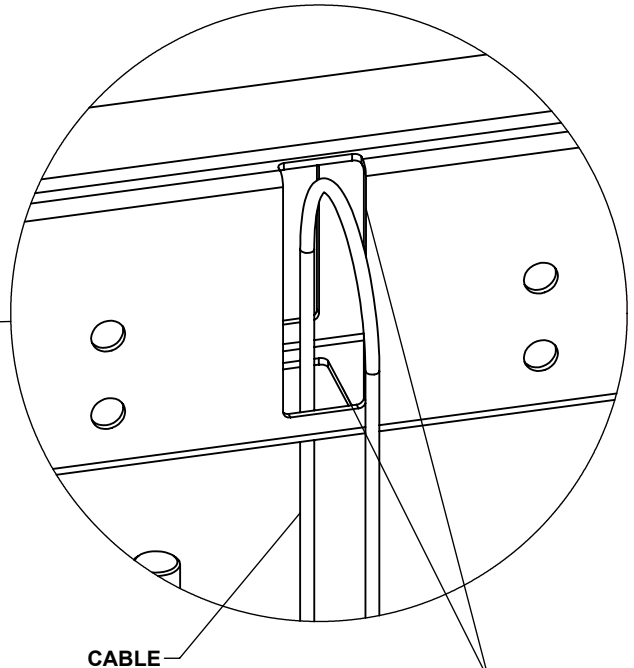

NOTE:
BEFORE ASSEMBLING THE TOP BOOM, ROUTE THE CABLE UP THROUGH THE BOTTOM SLOT AND OUT THE FRONT SLOT OF THE TOP BOOM SUPPORT AS SHOWN.

STEP 10
4' MODULE / OMNI STATION

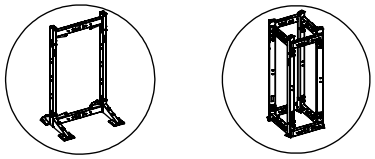

NOTE: 4' MODULE ASSEMBLY IS SHOWN.
FOLLOW THE EXACT SAME STEPS TO
ASSEMBLE THE OMNI STATION.

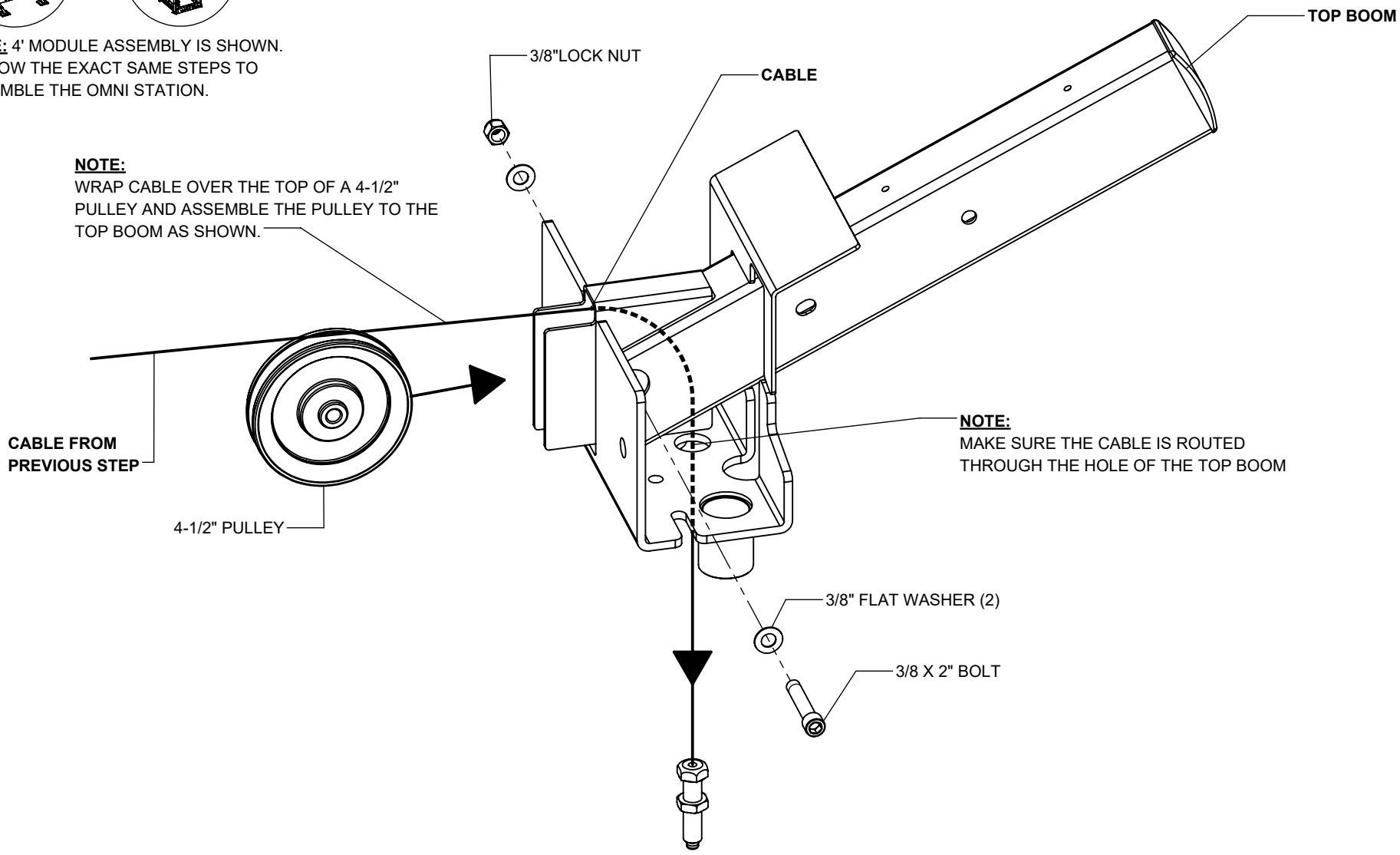

NOTES:

SECURELY tighten bolt connections in this step.

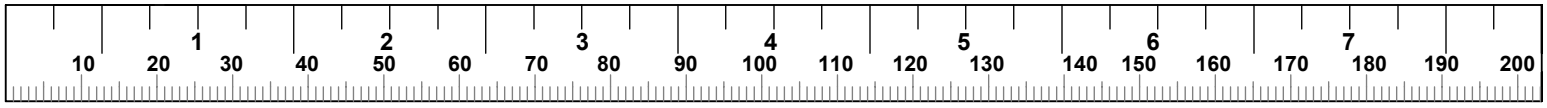

STEP 11
4' MODULE / OMNI STATION

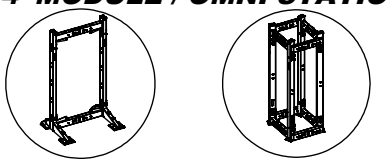

NOTE: 4' MODULE ASSEMBLY IS SHOWN. FOLLOW THE EXACT SAME STEPS TO ASSEMBLE THE OMNI STATION.

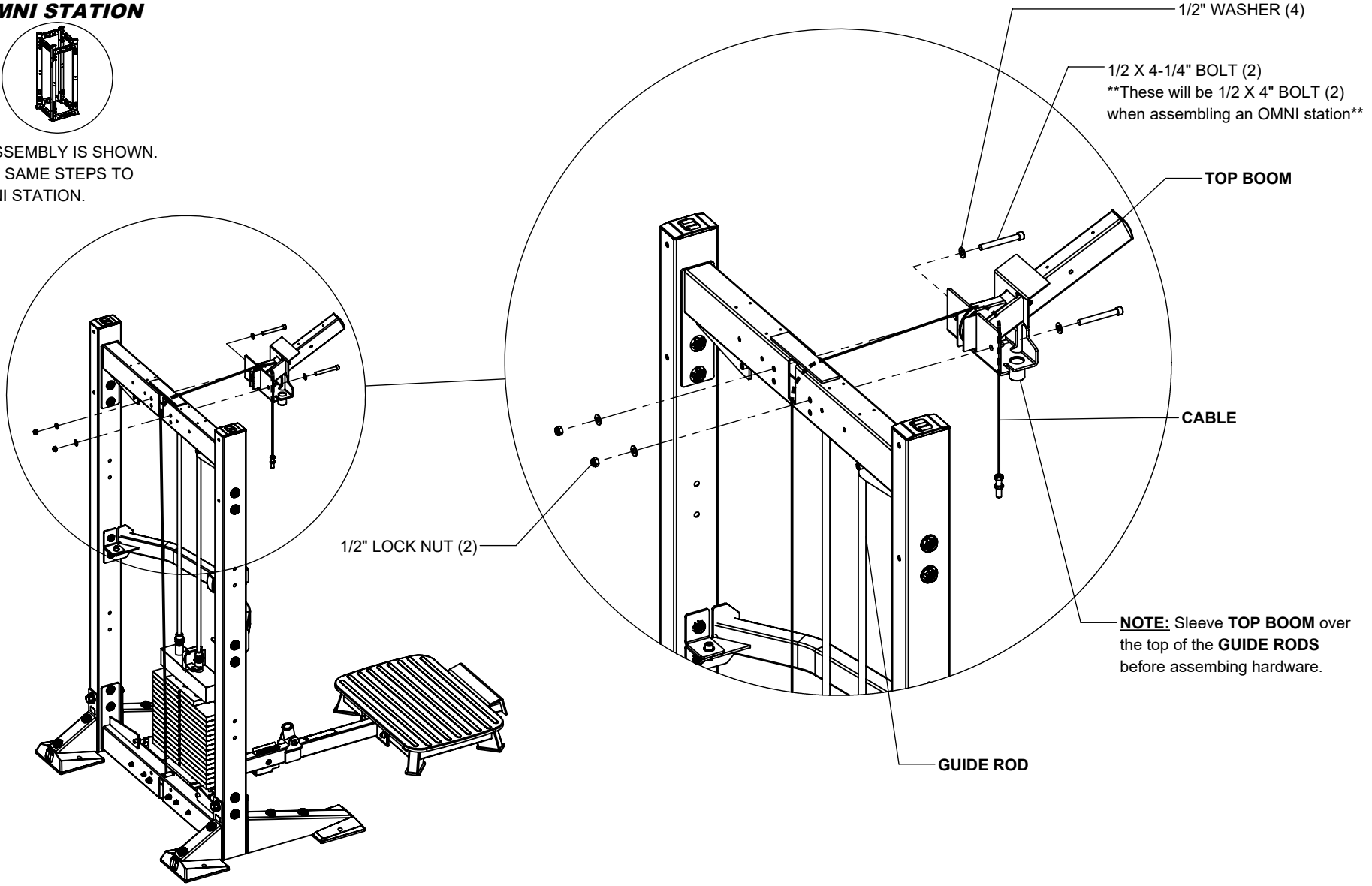

NOTES:

SECURELY tighten bolt connections in this step.

If assembling a cable station on the back side. Hardware used in this step will be shared, assemble both top booms at the same time.

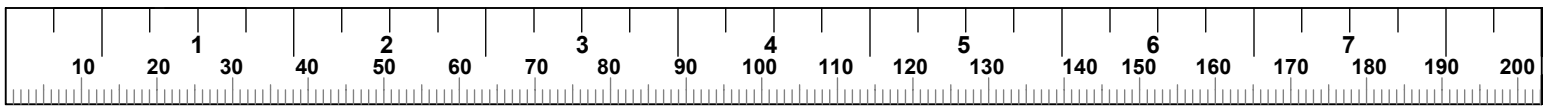

STEP 12
4' MODULE / OMNI STATION

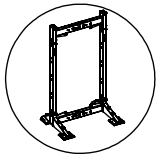

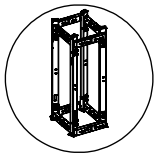

NOTE: 4' MODULE ASSEMBLY IS SHOWN. FOLLOW THE EXACT SAME STEPS TO ASSEMBLE THE OMNI STATION.

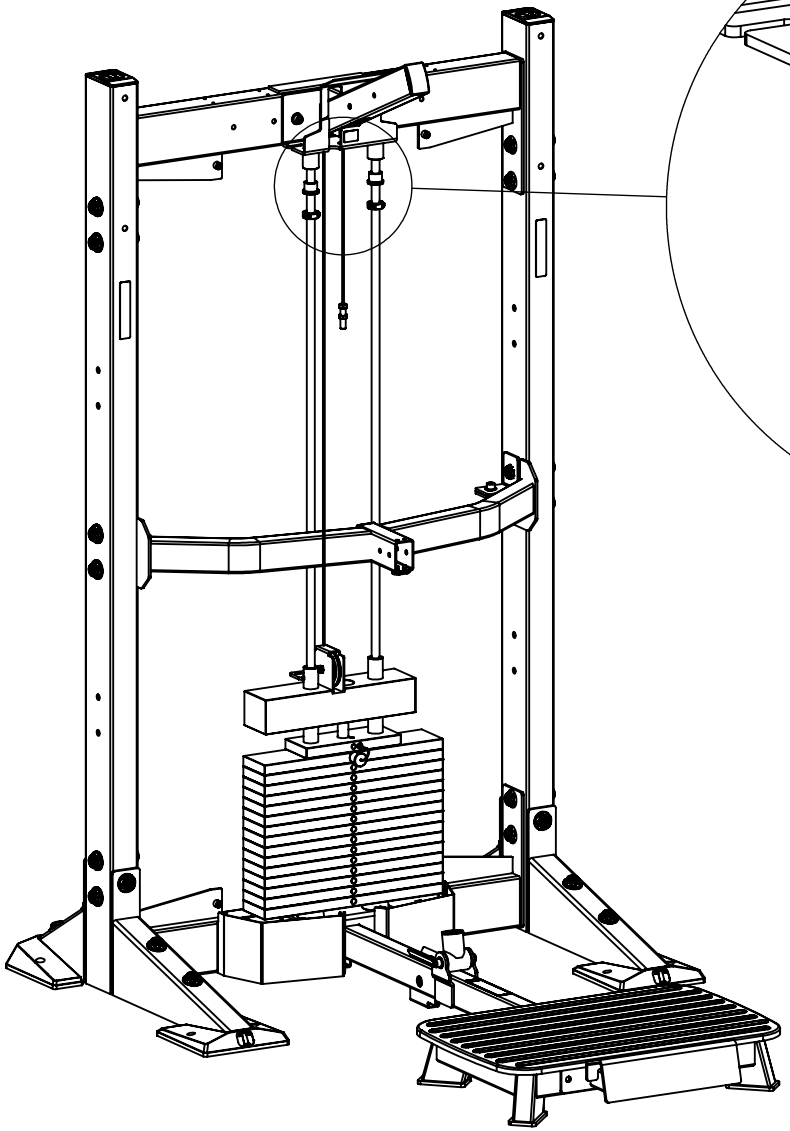

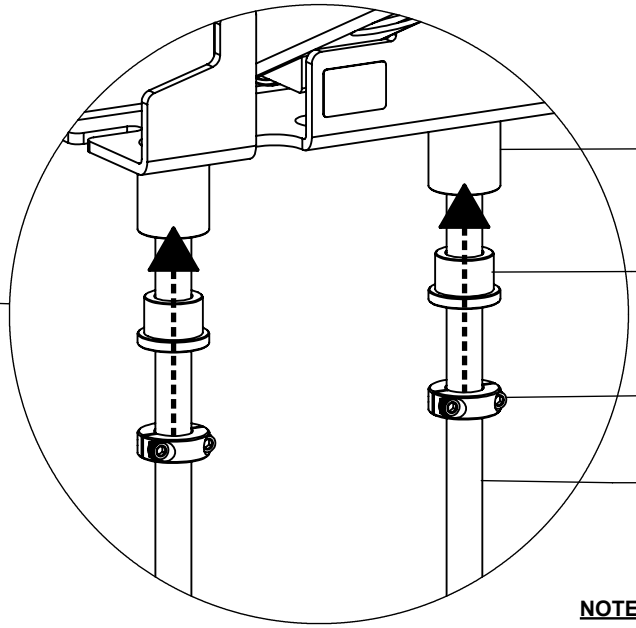

NOTE: PRESS GUIDE ROD RETAINERS INTO TOP BOOM. **SECURELY TIGHTEN** LOCK COLLARS.

STEP 13
4' MODULE / OMNI STATION

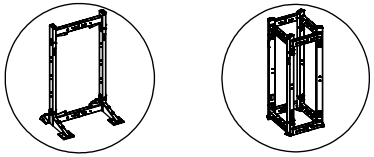

NOTE: 4' MODULE ASSEMBLY IS SHOWN. FOLLOW THE EXACT SAME STEPS TO ASSEMBLE THE OMNI STATION.

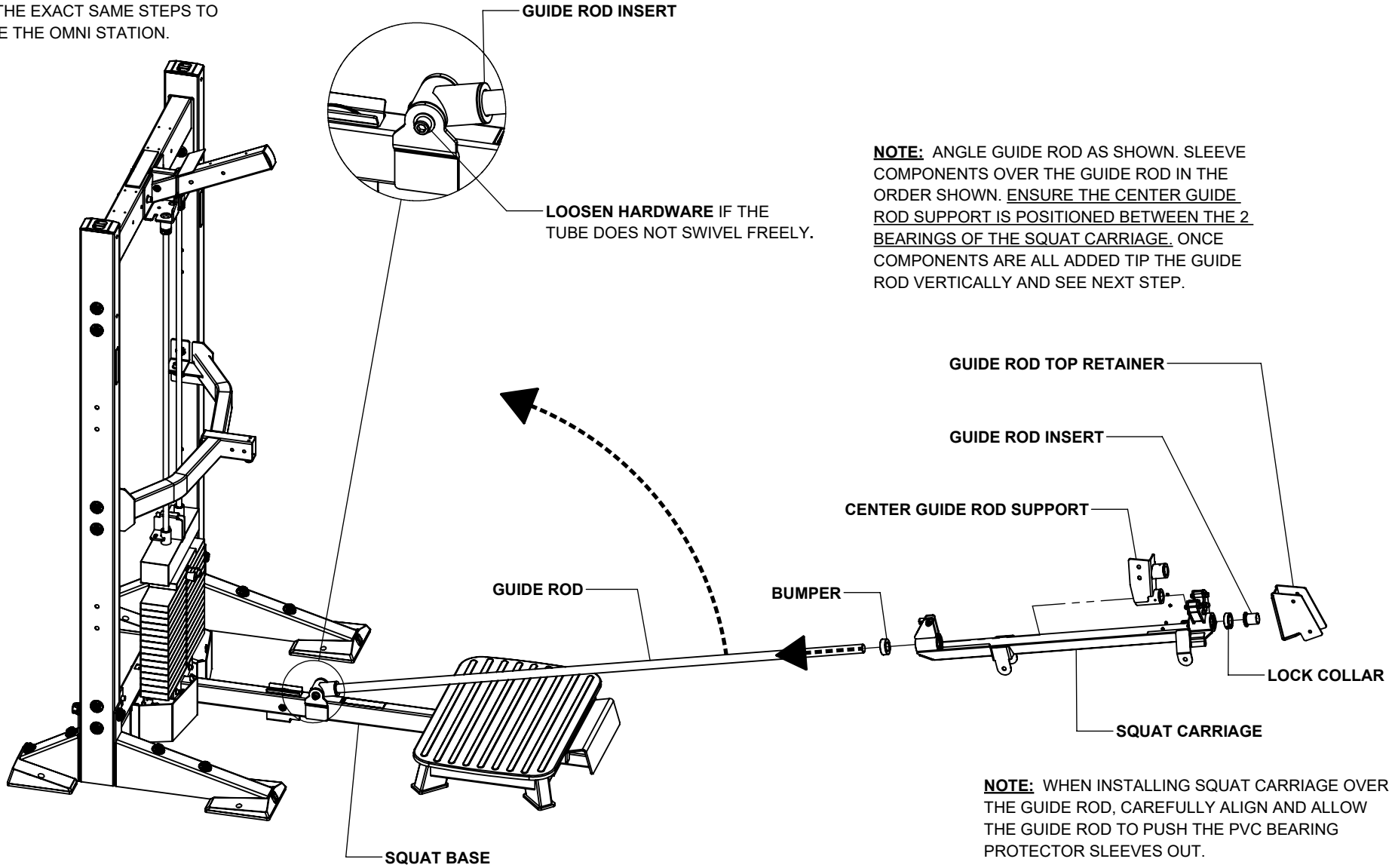

NOTE: ANGLE GUIDE ROD AS SHOWN. SLEEVE COMPONENTS OVER THE GUIDE ROD IN THE ORDER SHOWN. ENSURE THE CENTER GUIDE ROD SUPPORT IS POSITIONED BETWEEN THE 2 BEARINGS OF THE SQUAT CARRIAGE. ONCE COMPONENTS ARE ALL ADDED TIP THE GUIDE ROD VERTICALLY AND SEE NEXT STEP.

NOTE: WHEN INSTALLING SQUAT CARRIAGE OVER THE GUIDE ROD, CAREFULLY ALIGN AND ALLOW THE GUIDE ROD TO PUSH THE PVC BEARING PROTECTOR SLEEVES OUT.

NOTES:

This step requires 2 people.

STEP 14
4' MODULE / OMNI STATION

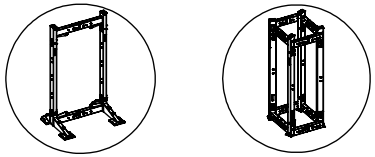

NOTE: 4' MODULE ASSEMBLY IS SHOWN. FOLLOW THE EXACT SAME STEPS TO ASSEMBLE THE OMNI STATION.

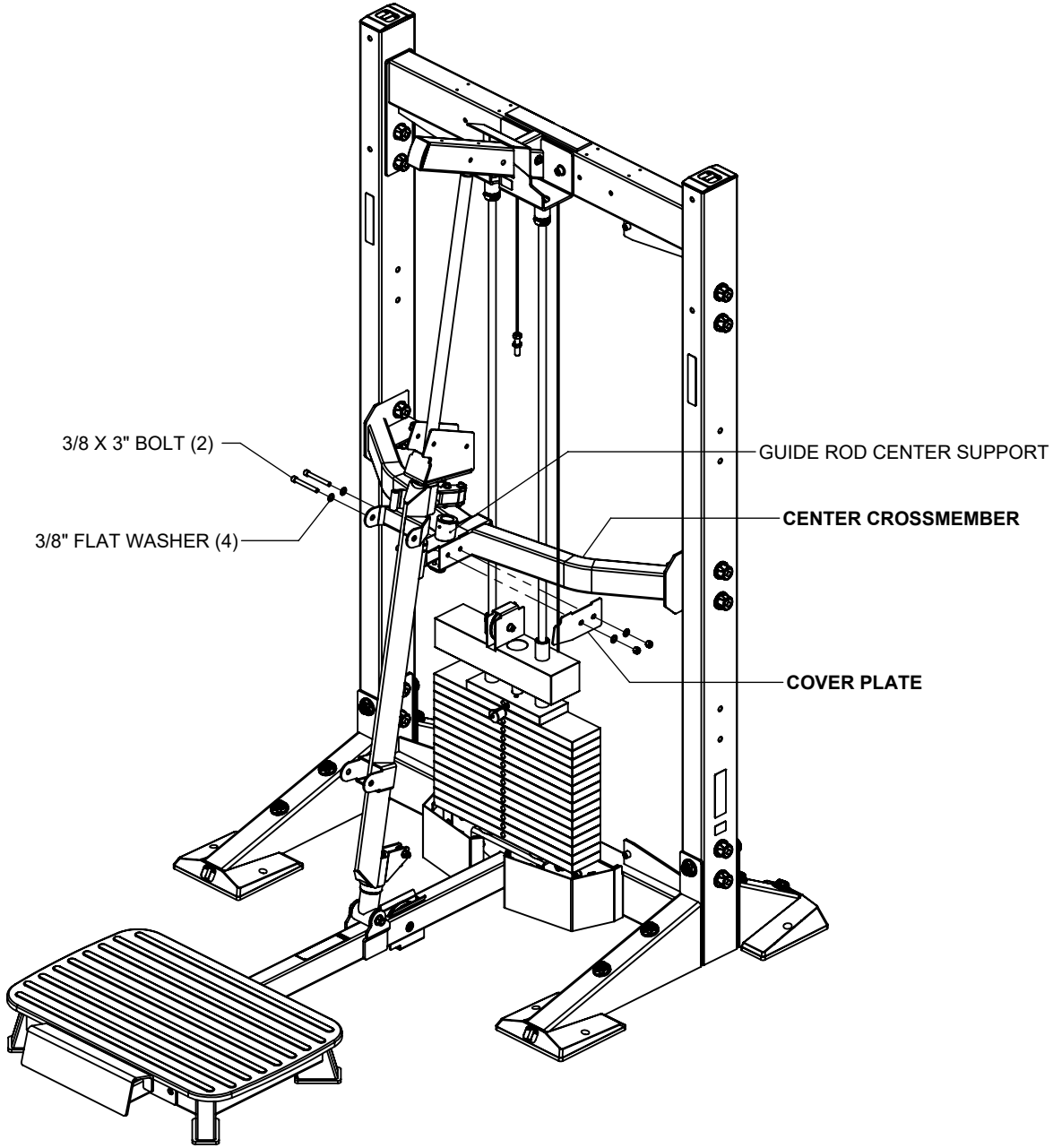

NOTES:

LOOSELY tighten bolt connections in this step.

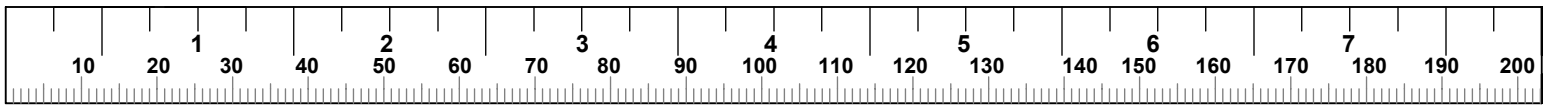

STEP 15
4' MODULE / OMNI STATION

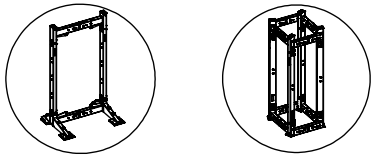

NOTE: 4' MODULE ASSEMBLY IS SHOWN. FOLLOW THE EXACT SAME STEPS TO ASSEMBLE THE OMNI STATION.

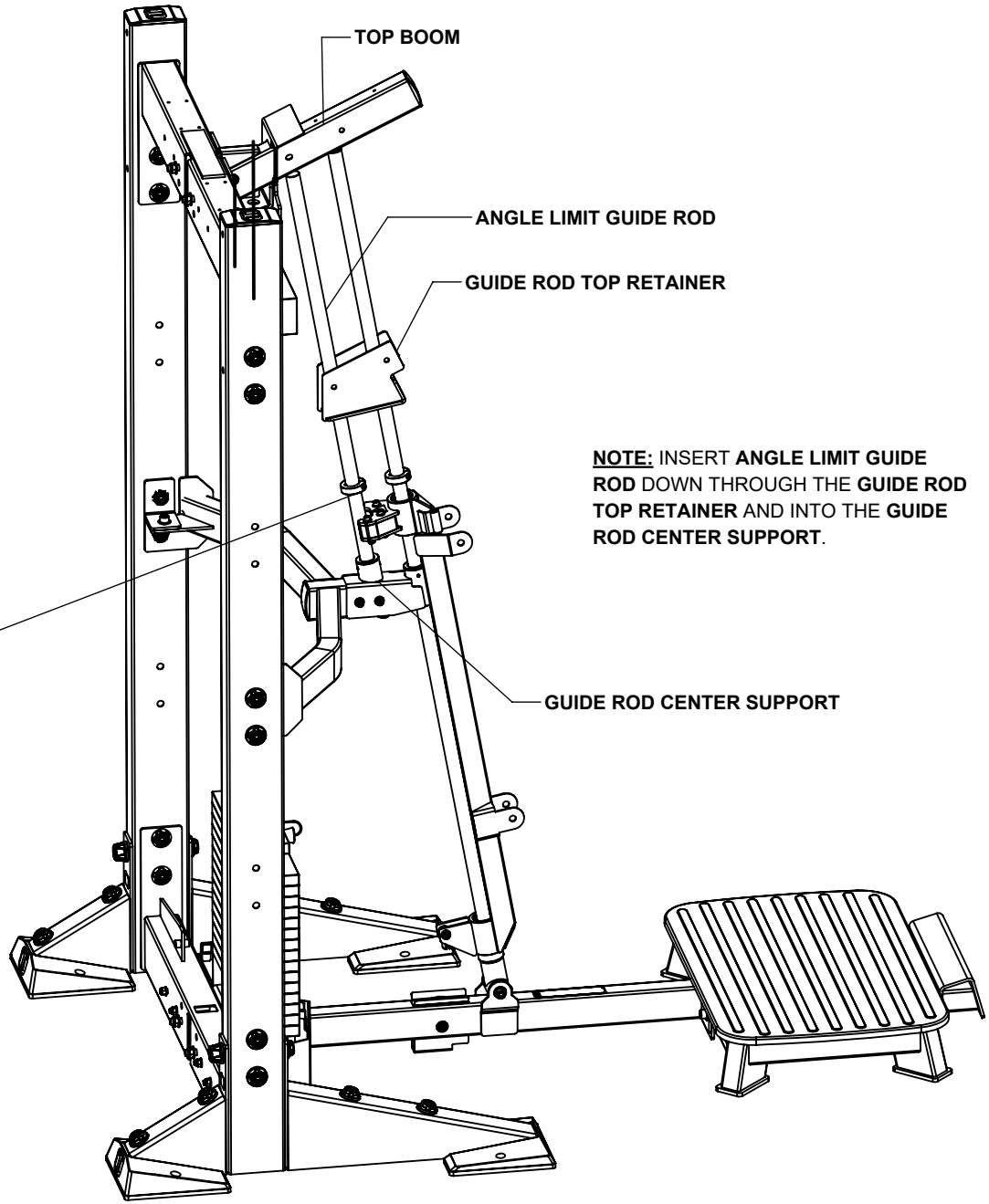

NOTE: INSERT **ANGLE LIMIT GUIDE ROD** DOWN THROUGH THE **GUIDE ROD TOP RETAINER** AND INTO THE **GUIDE ROD CENTER SUPPORT**.

NOTE: INSTALL THE **LOCK COLLAR** ON THE **ANGLE LIMIT GUIDE ROD,** BELOW THE **GUIDE ROD TOP RETAINER**

STEP 16
4' MODULE / OMNI STATION

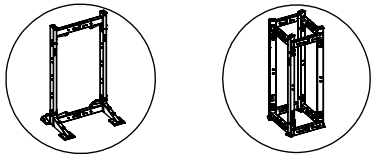

NOTE: 4' MODULE ASSEMBLY IS SHOWN. FOLLOW THE EXACT SAME STEPS TO ASSEMBLE THE OMNI STATION.

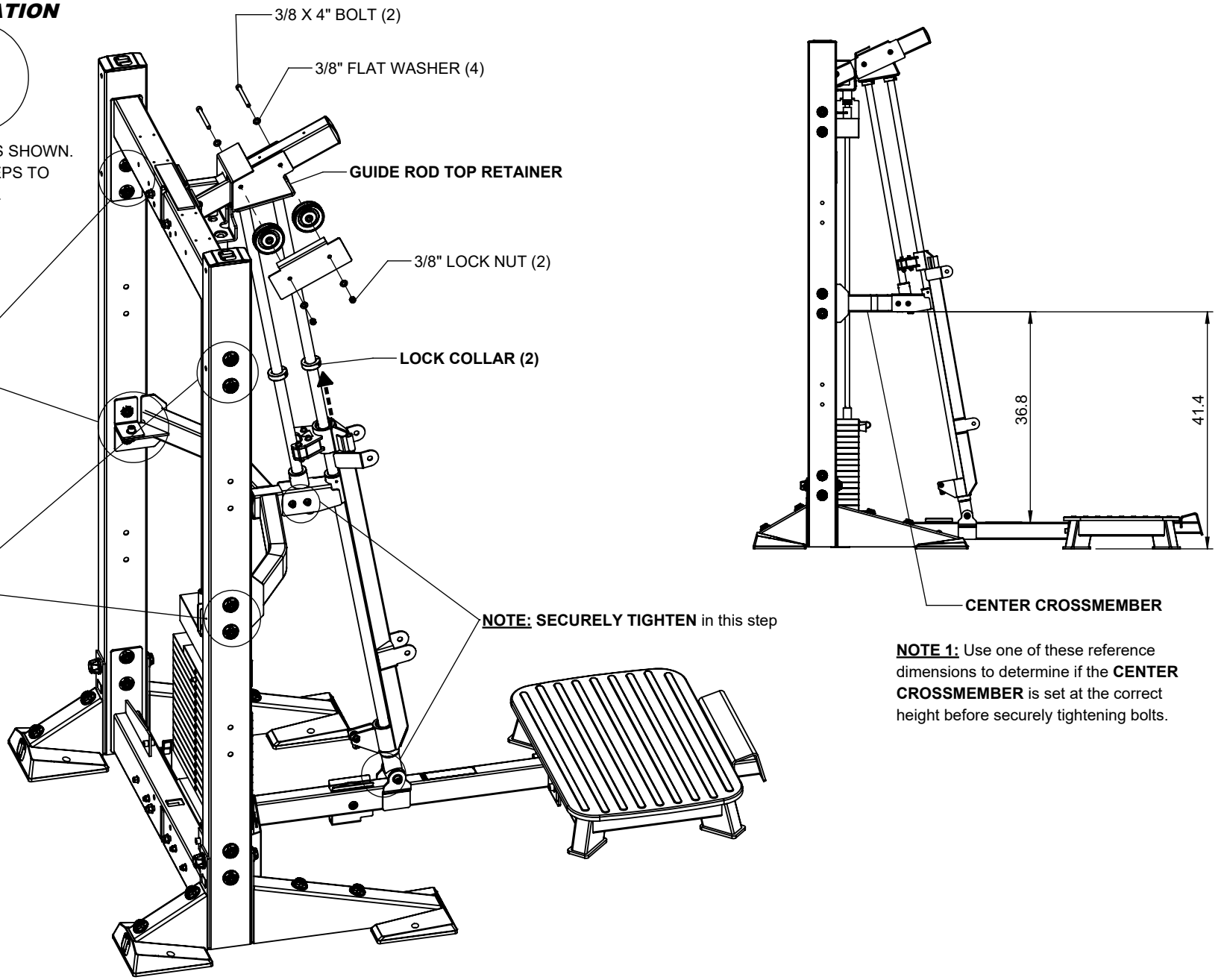

NOTE 1: Use one of these reference dimensions to determine if the **CENTER CROSSMEMBER** is set at the correct height before securely tightening bolts.

NOTES:

SECURELY tighten bolt connections in this step.

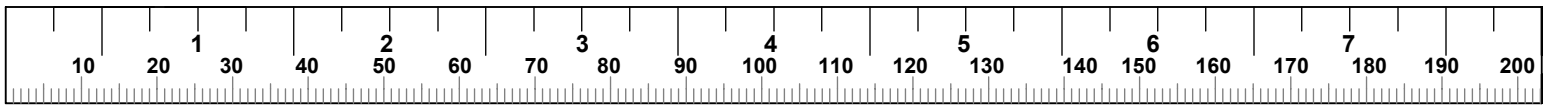

STEP 17
4' MODULE / OMNI STATION

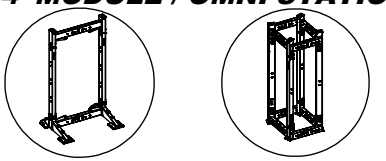

NOTE: 4' MODULE ASSEMBLY IS SHOWN.
FOLLOW THE EXACT SAME STEPS TO
ASSEMBLE THE OMNI STATION.

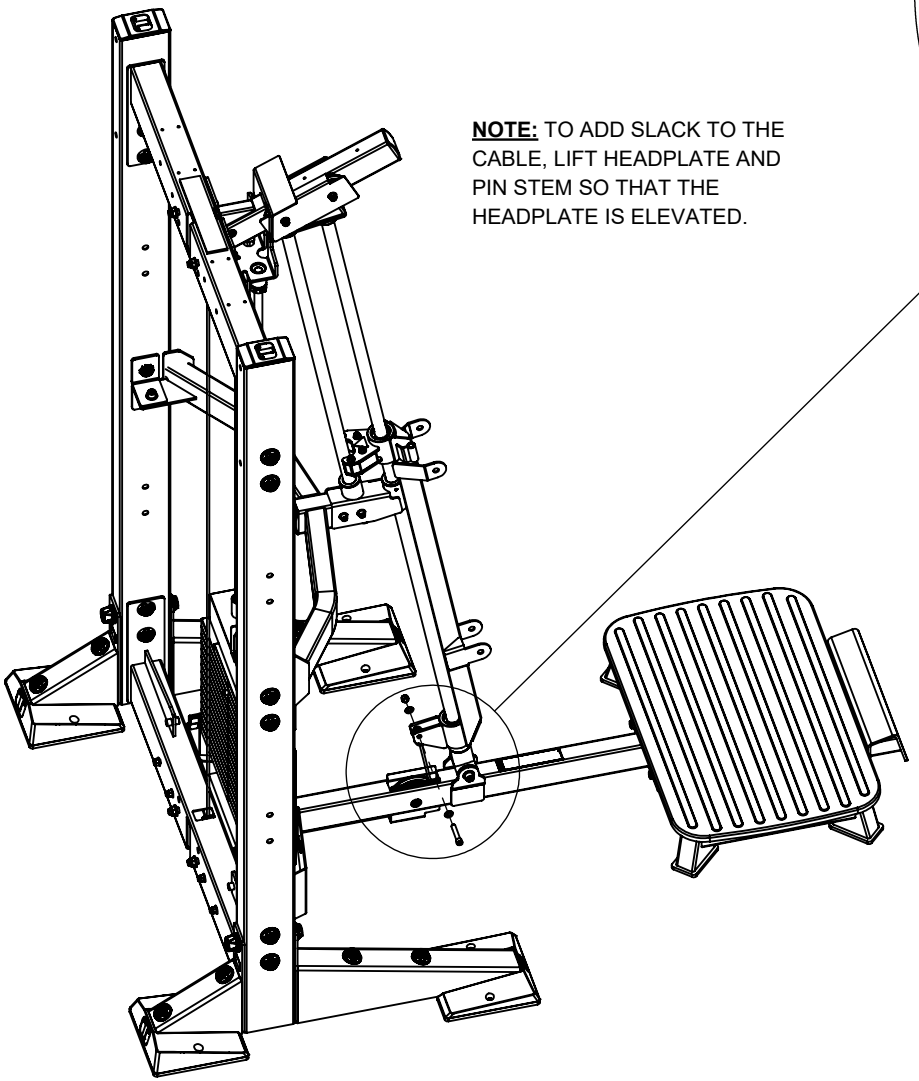

NOTE: TO ADD SLACK TO THE CABLE, LIFT HEADPLATE AND PIN STEM SO THAT THE HEADPLATE IS ELEVATED.

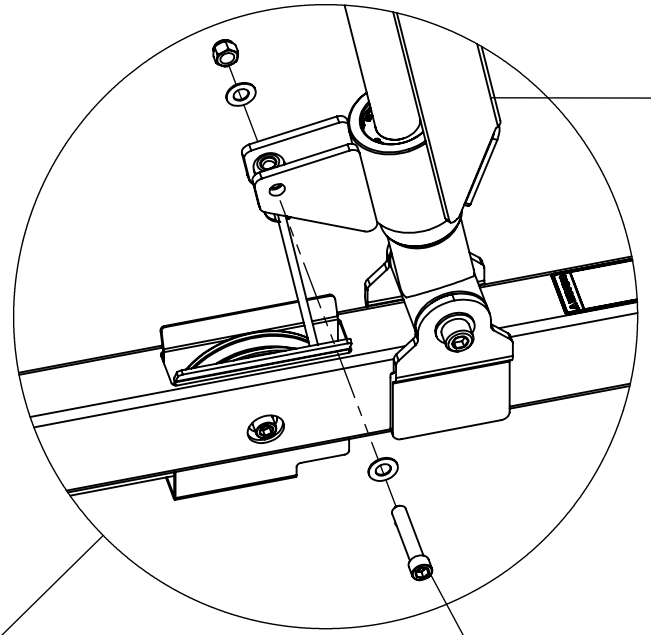

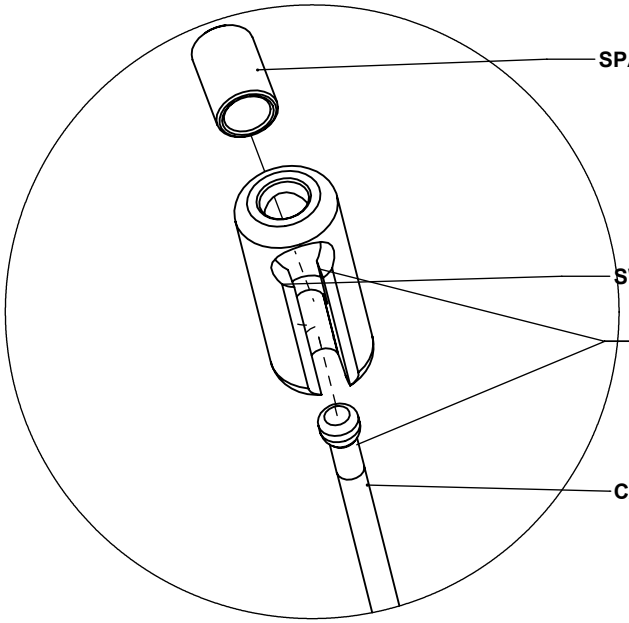

NOTE: ASSEMBLE CABLE INTO
CABLE END AS SHOWN.
REASSEMBLE HARDWARE ABOVE.

NOTES:

SECURELY tighten bolt connections in this step.

STEP 18
4' MODULE / OMNI STATION

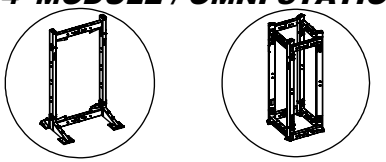

NOTE: 4' MODULE ASSEMBLY IS SHOWN. FOLLOW THE EXACT SAME STEPS TO ASSEMBLE THE OMNI STATION.

NOTES:

SECURELY tighten bolt connections in this step.

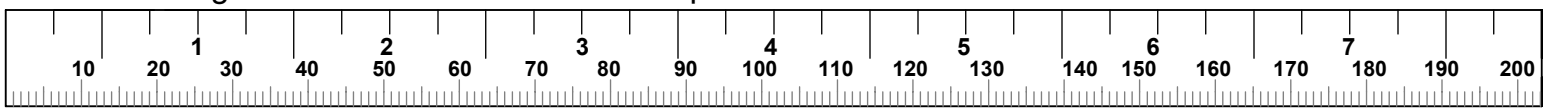

STEP 19
4' MODULE / OMNI STATION

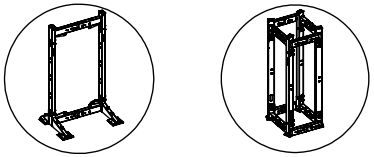

NOTE: 4' MODULE ASSEMBLY IS SHOWN. FOLLOW THE EXACT SAME STEPS TO ASSEMBLE THE OMNI STATION.

NOTES:

SECURELY tighten bolt connections in this step, and previous step.

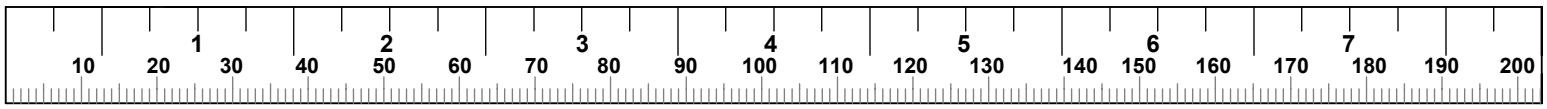

STEP 20
4' MODULE / OMNI STATION

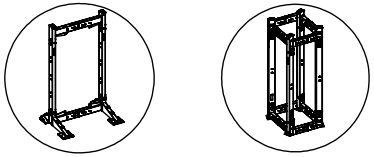

NOTE: 4' MODULE ASSEMBLY IS SHOWN. FOLLOW THE EXACT SAME STEPS TO ASSEMBLE THE OMNI STATION.

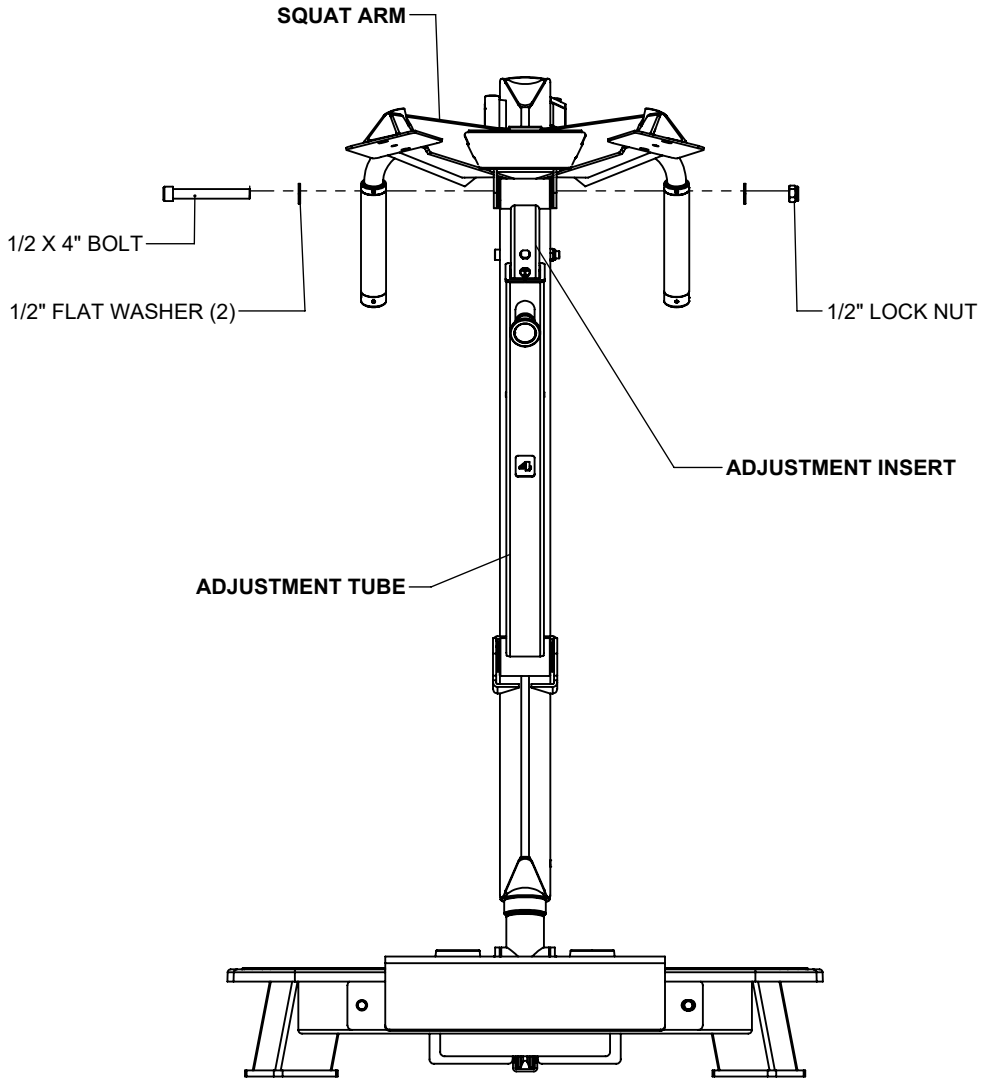

NOTES:

Some parts were hidden for illustration clarity.

SECURELY tighten bolt connections in this step.

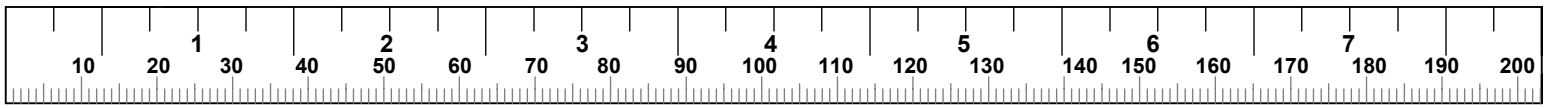

STEP 21A & 21B
4' MODULE / OMNI STATION

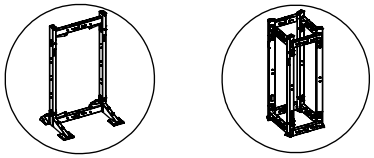

NOTE: 4' MODULE ASSEMBLY IS SHOWN. FOLLOW THE EXACT SAME STEPS TO ASSEMBLE THE OMNI STATION.

NOTE: HAND TIGHTEN HARDWARE IN THIS STEP

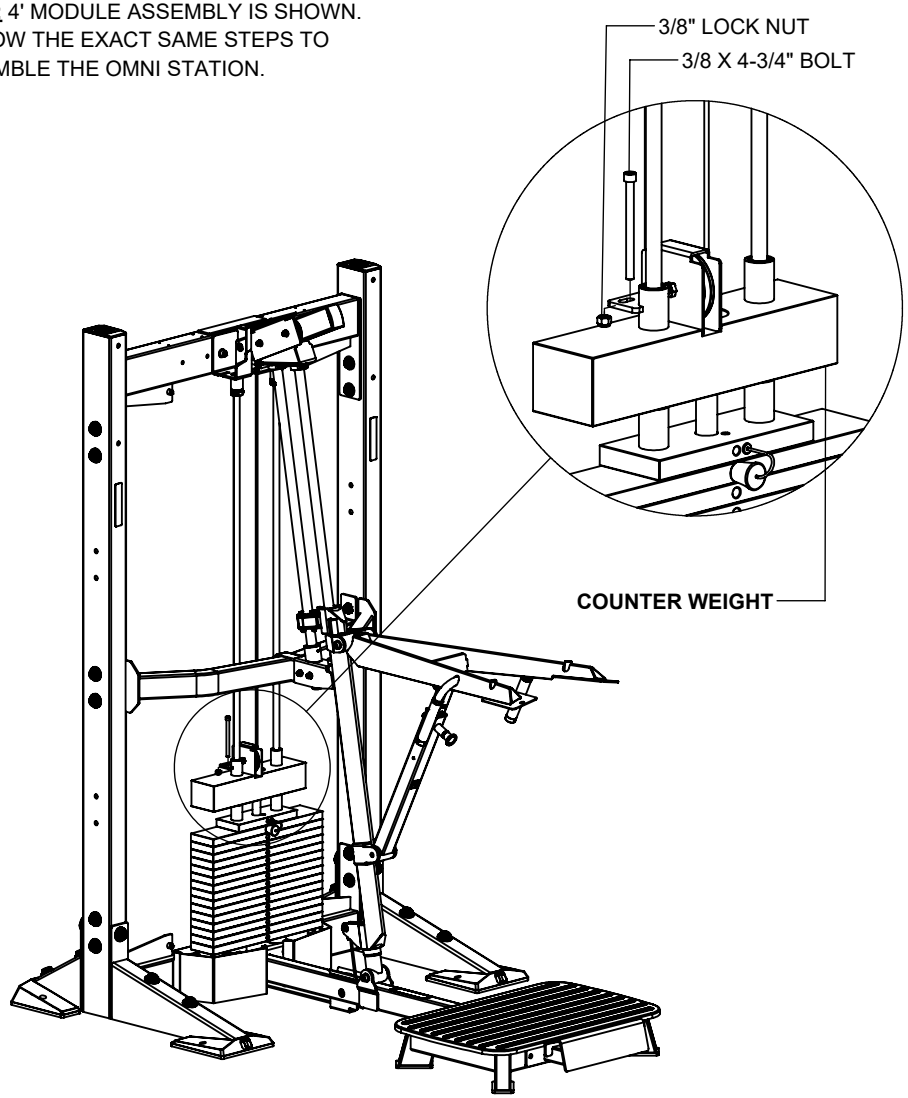

NOTE: LIFT COUNTER WEIGHT TO THE TOP OF THE GUIDE RODS. USING THE BOLT IN PREVIOUS STEP, HANG THE COUNTERWEIGHT FROM THE SLOT IN THE TOP BOOM.

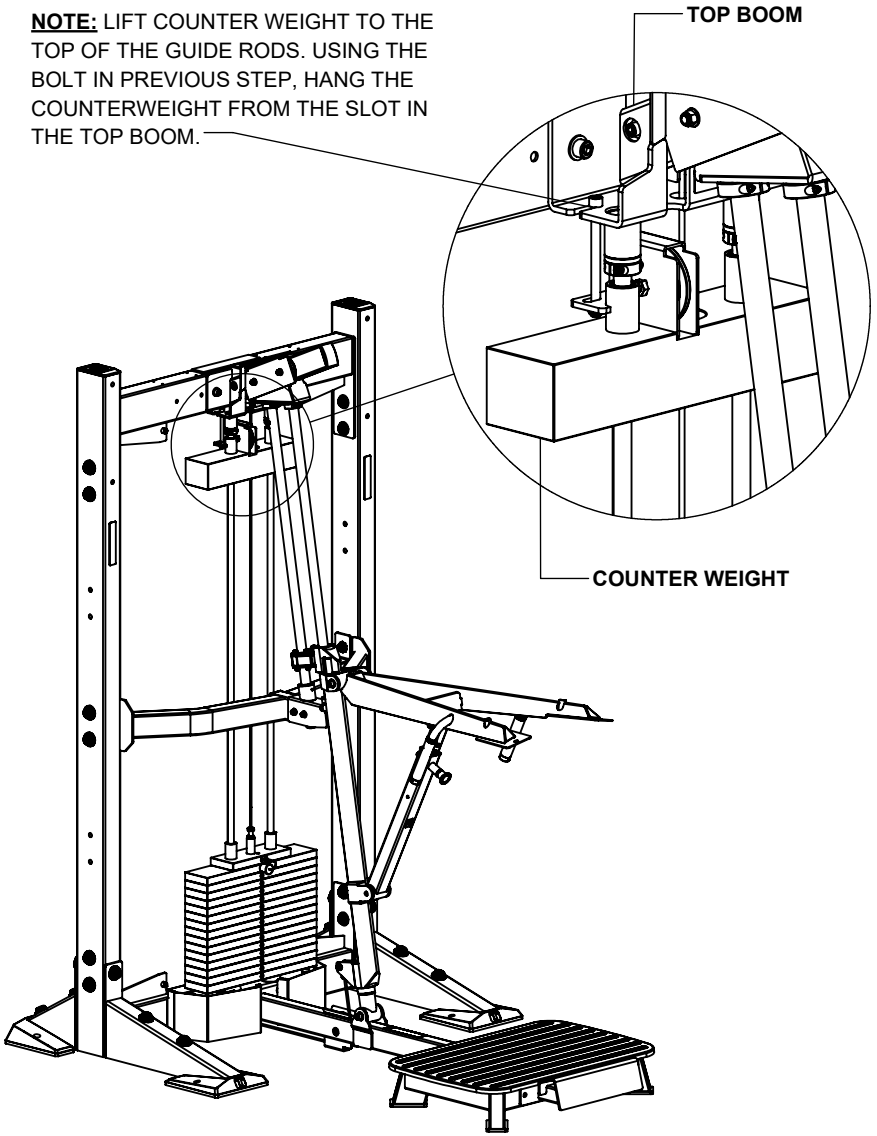

NOTES:

THIS STEP REQUIRES 2 PEOPLE.

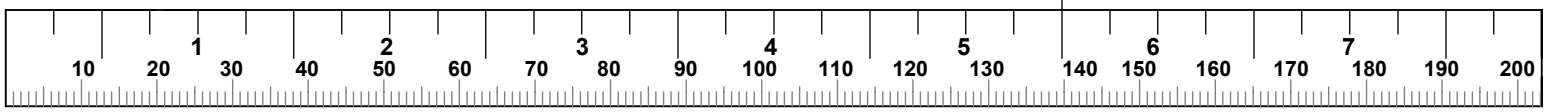

STEP 22
4' MODULE / OMNI STATION

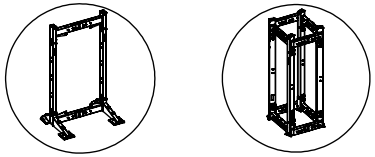

NOTE: 4' MODULE ASSEMBLY IS SHOWN. FOLLOW THE EXACT SAME STEPS TO ASSEMBLE THE OMNI STATION.

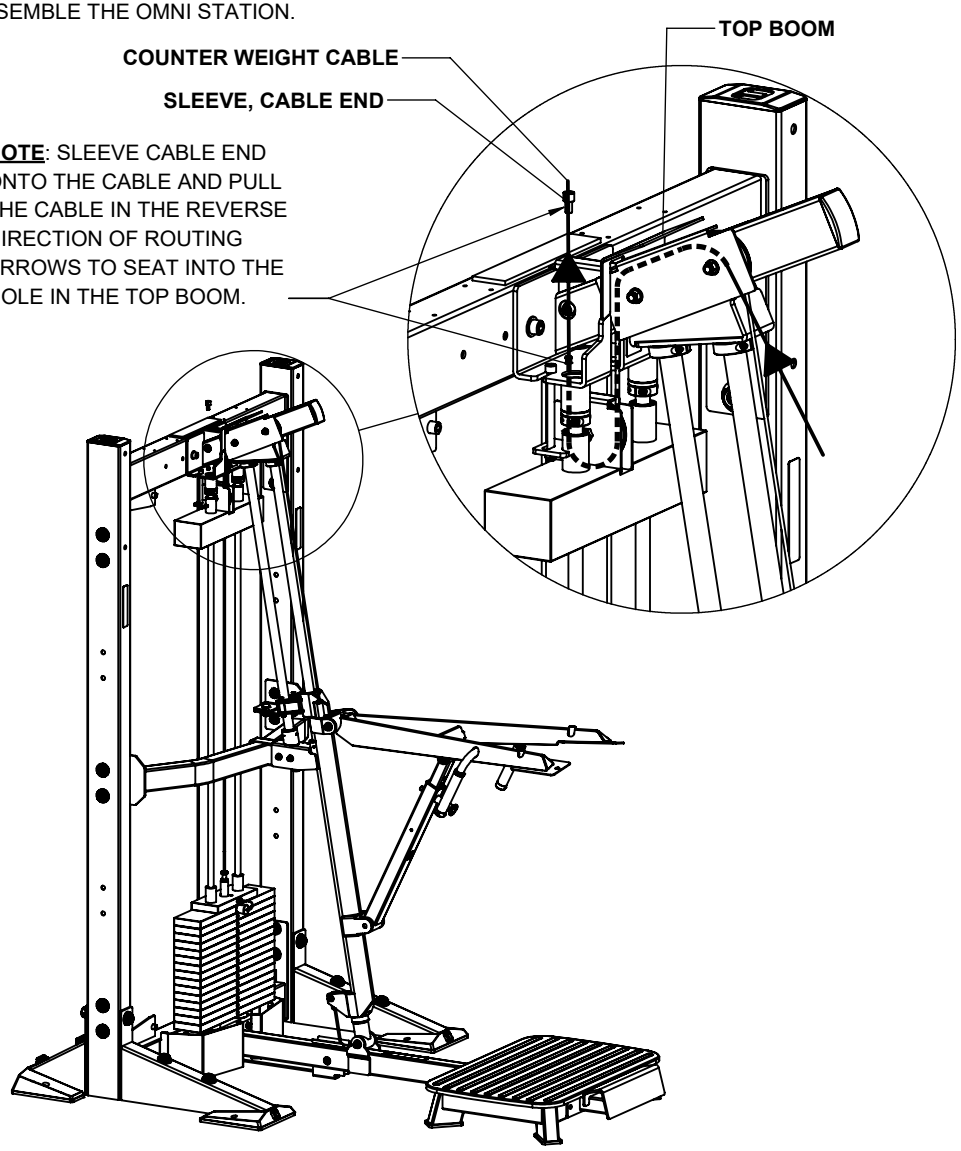

CAUTION: When routing cables, make sure that the cable is seated in the groove of all pulleys and underneath all retaining bolts, pins or brackets. Failure to do so, may result in damage to cable.

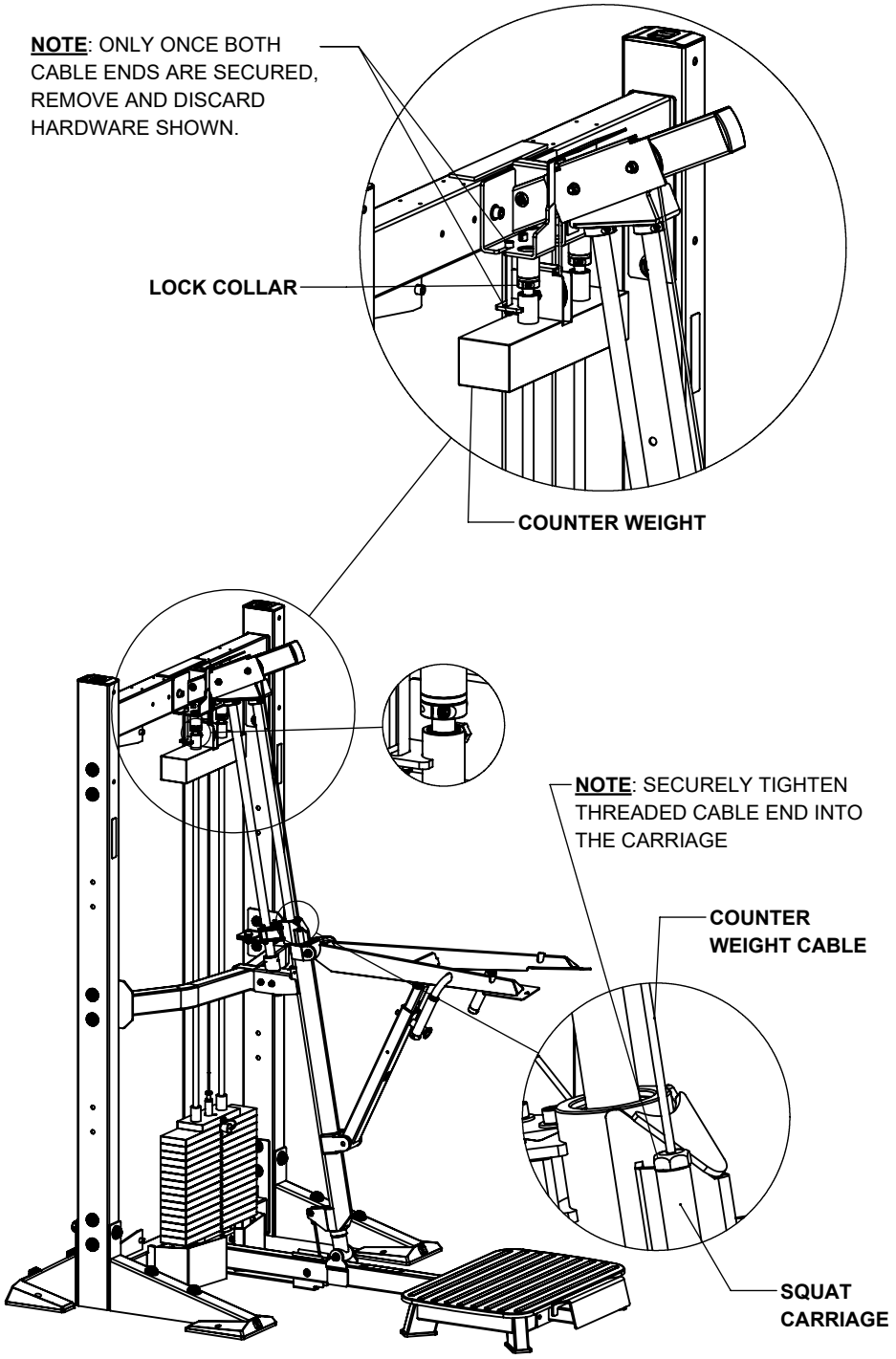

STEP 23
4' MODULE / OMNI STATION

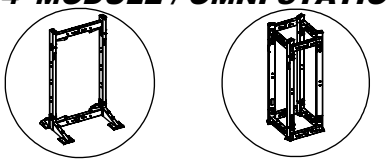

NOTE: 4' MODULE ASSEMBLY IS SHOWN. FOLLOW THE EXACT SAME STEPS TO ASSEMBLE THE OMNI STATION.

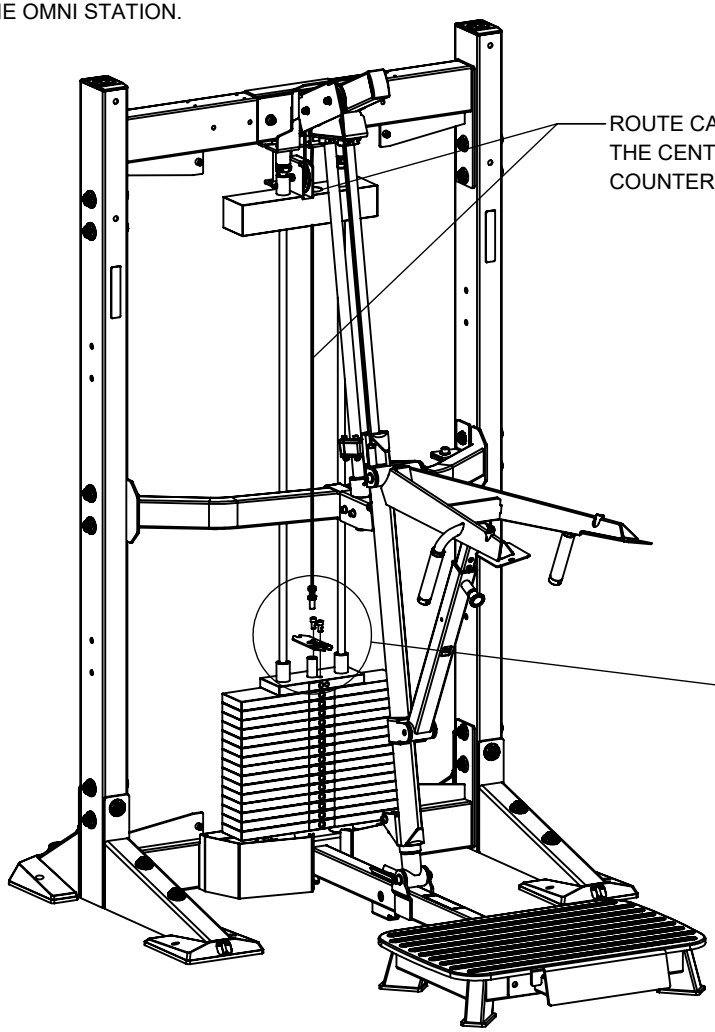

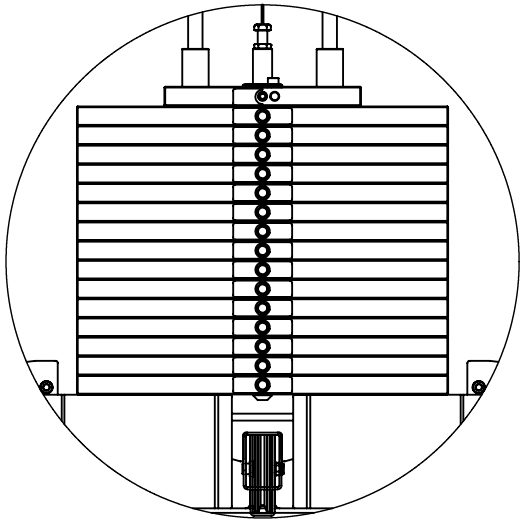

NOTE: ATTACH THE WEIGHT STACK LABELS TO THE WEIGHT STACK STARTING WITH THE HEAD PLATE.

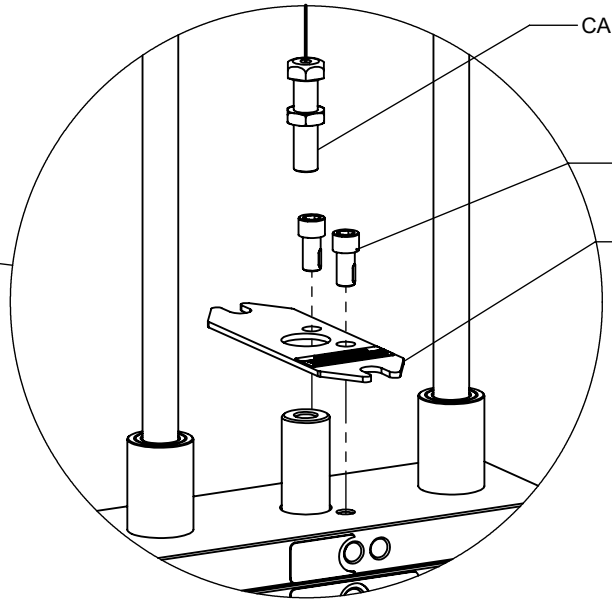

NOTES:

SECURELY tighten bolt connections in this step.

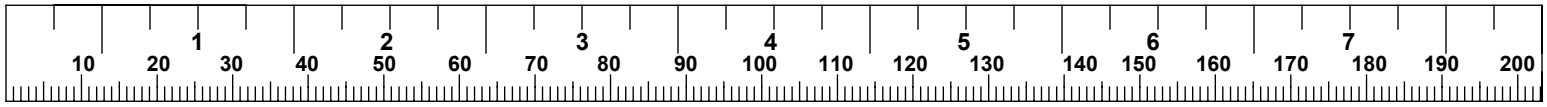

STEP 24
4' MODULE / OMNI STATION

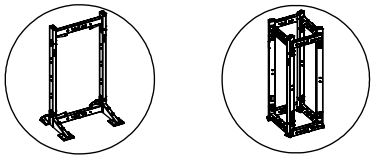

NOTE: 4' MODULE ASSEMBLY IS SHOWN. FOLLOW THE EXACT SAME STEPS TO ASSEMBLE THE OMNI STATION.

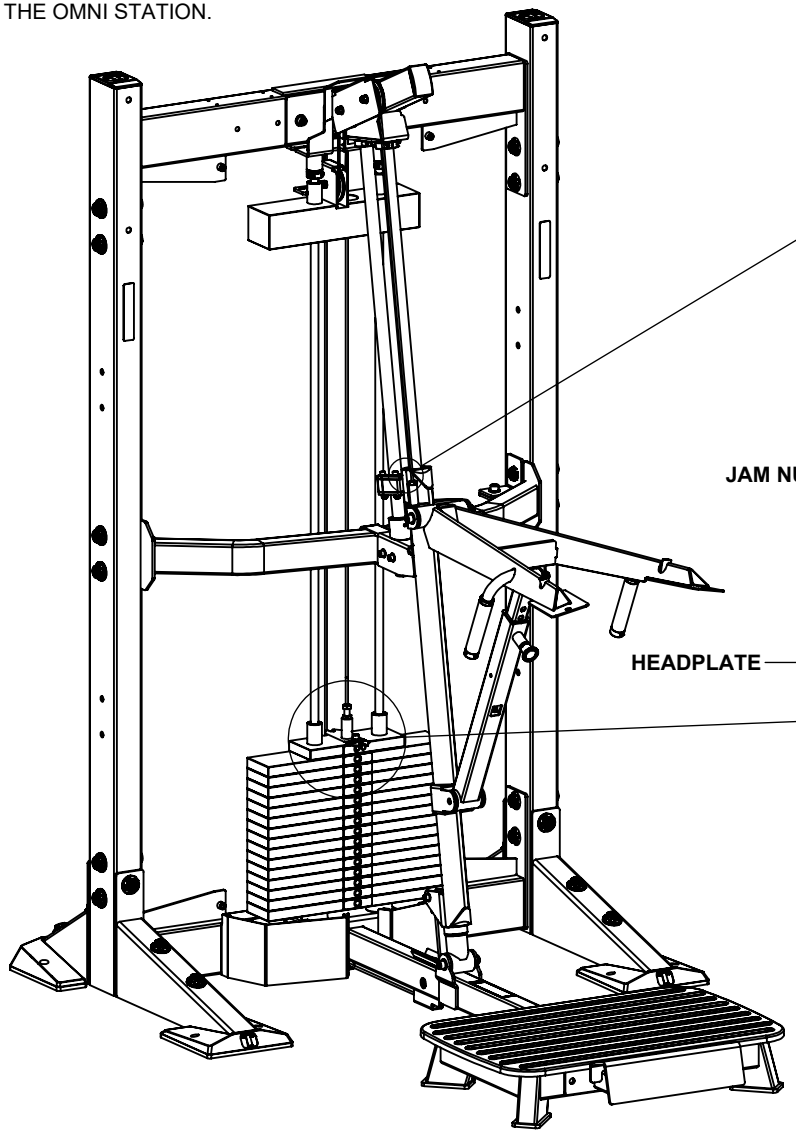

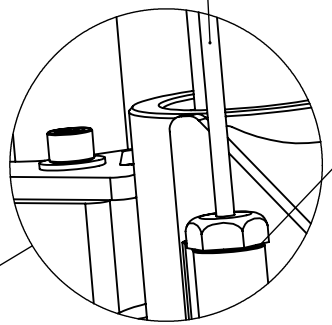

NOTE: COUNTER WEIGHT CABLE IS NOT MEANT TO BE ADJUSTED. BOLT MUST BE SECURELY TIGHTENED. SEE WARNING BELOW.

WARNING! IF LOOSENING THE CABLE END, **THE COUNTER WEIGHT MUST BE SUPPORTED**. LOOSENING TOO FAR WILL CAUSE THE COUNTER WEIGHT TO FALL. SEE PREVIOUS STEPS FOR HANGING THE COUNTER WEIGHT FROM THE TOP BOOM**.**

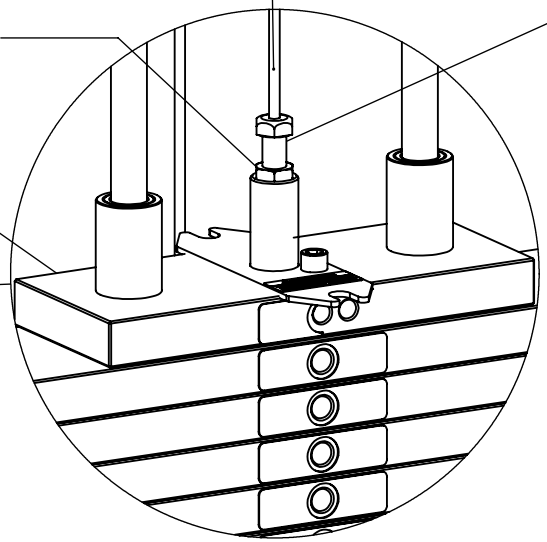

NOTE: IF THERE IS A GAP BETWEEN THE HEADPLATE AND THE FIRST PLATE, LOOSEN CABLE END.

IF SLACK IS PRESENT IN THE CABLE TIGHTEN CABLE END.

ONCE THERE IS MINIMAL SLACK IN THE CABLE, CHECK THAT THE WEIGHT STACK PIN GOES SMOOTHLY INTO EACH WEIGHT PLATE. ADJUST AS NEEDED AND **SECURELY TIGHTEN JAM NUT**.

NOTES:

SECURELY tighten bolt connections in this step.

STEP 25
4' MODULE / OMNI STATION

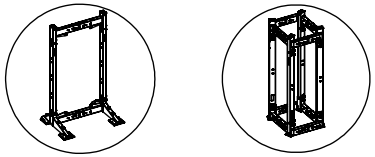

NOTE: 4' MODULE ASSEMBLY IS SHOWN. FOLLOW THE EXACT SAME STEPS TO ASSEMBLE THE OMNI STATION.

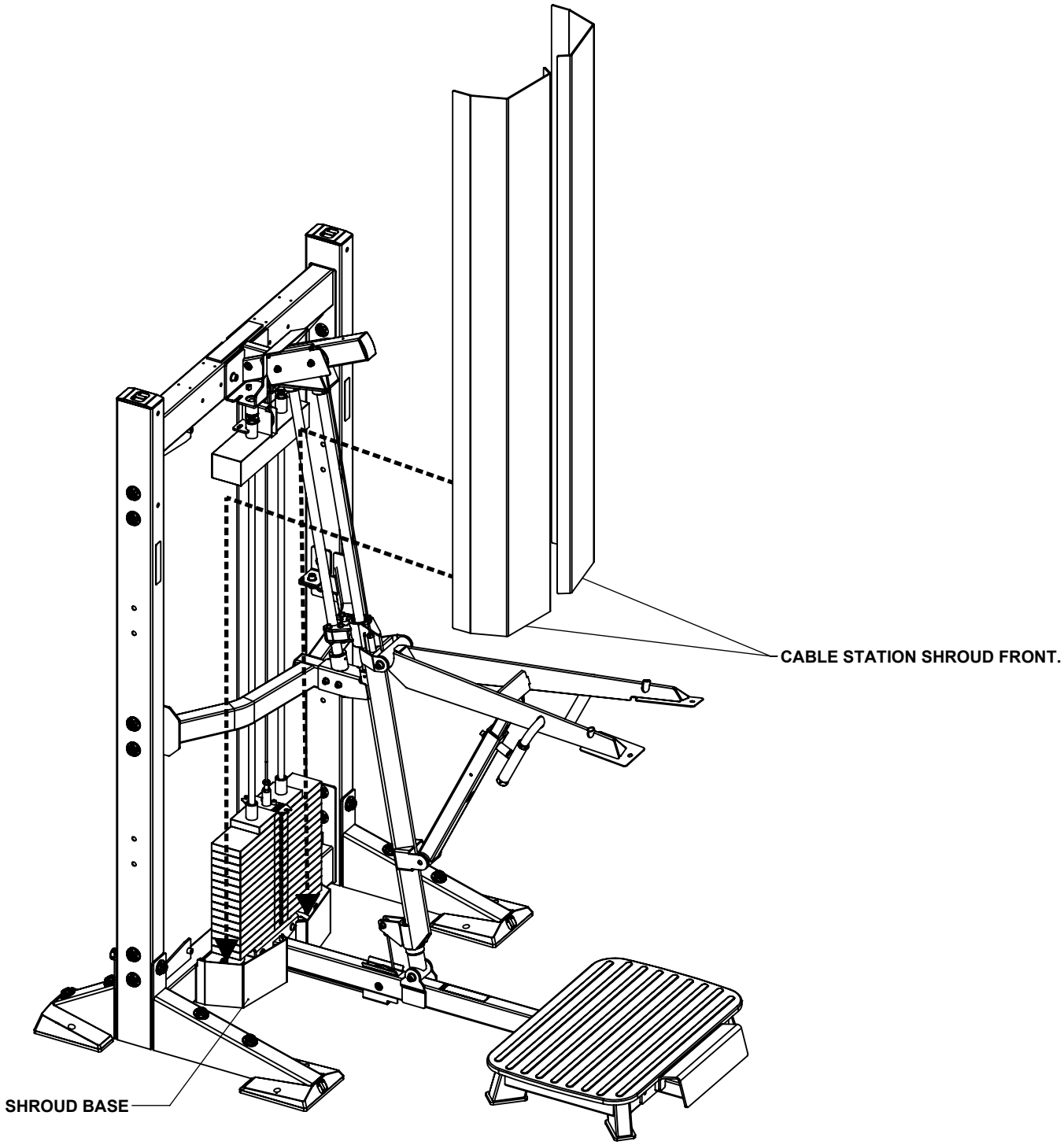

STEP 26
4' MODULE / OMNI STATION

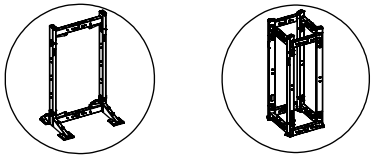

NOTE: 4' MODULE ASSEMBLY IS SHOWN. FOLLOW THE EXACT SAME STEPS TO ASSEMBLE THE OMNI STATION.

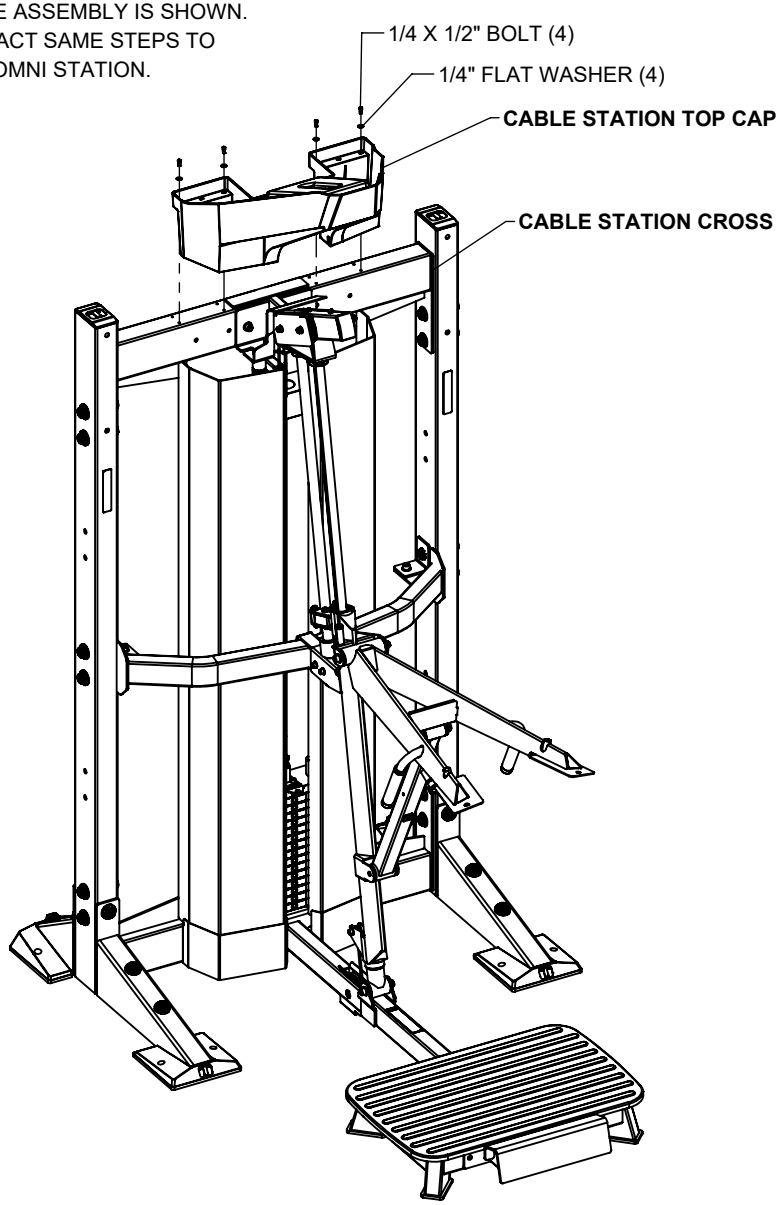

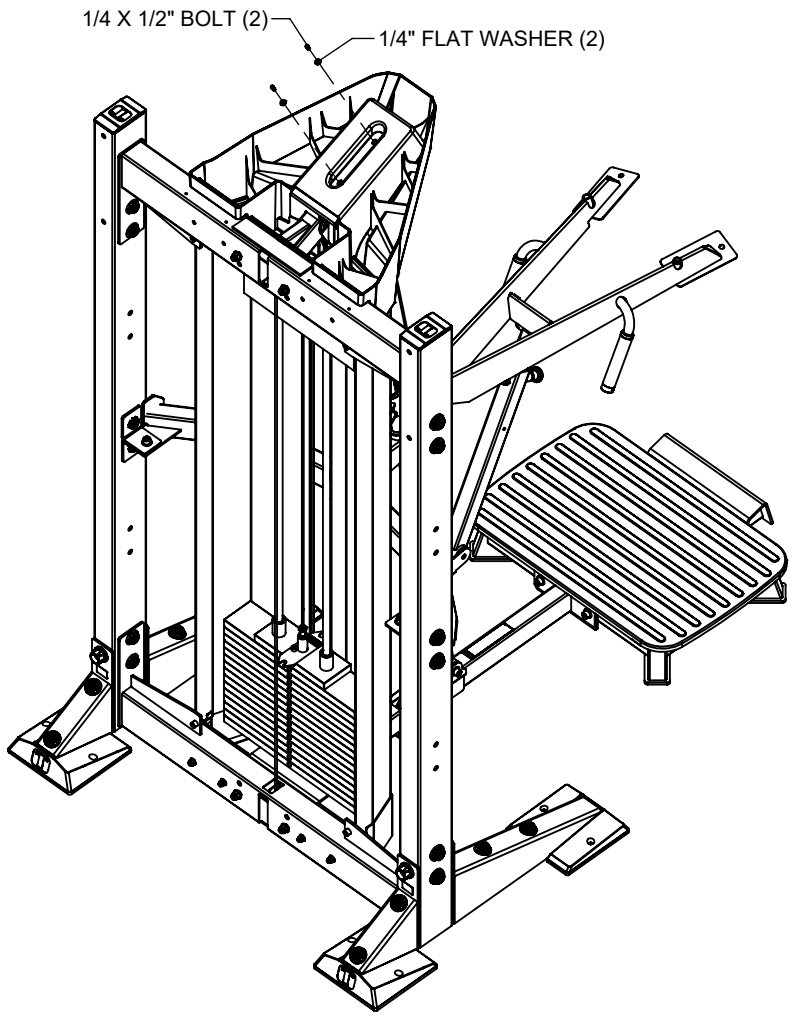

NOTES:

SECURELY tighten bolt connections in this step and previous steps.

STEP 27
4' MODULE / OMNI STATION

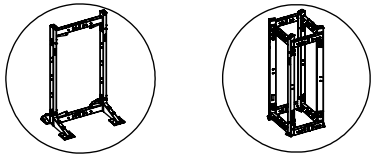

NOTE: 4' MODULE ASSEMBLY IS SHOWN. FOLLOW THE EXACT SAME STEPS TO ASSEMBLE THE OMNI STATION.

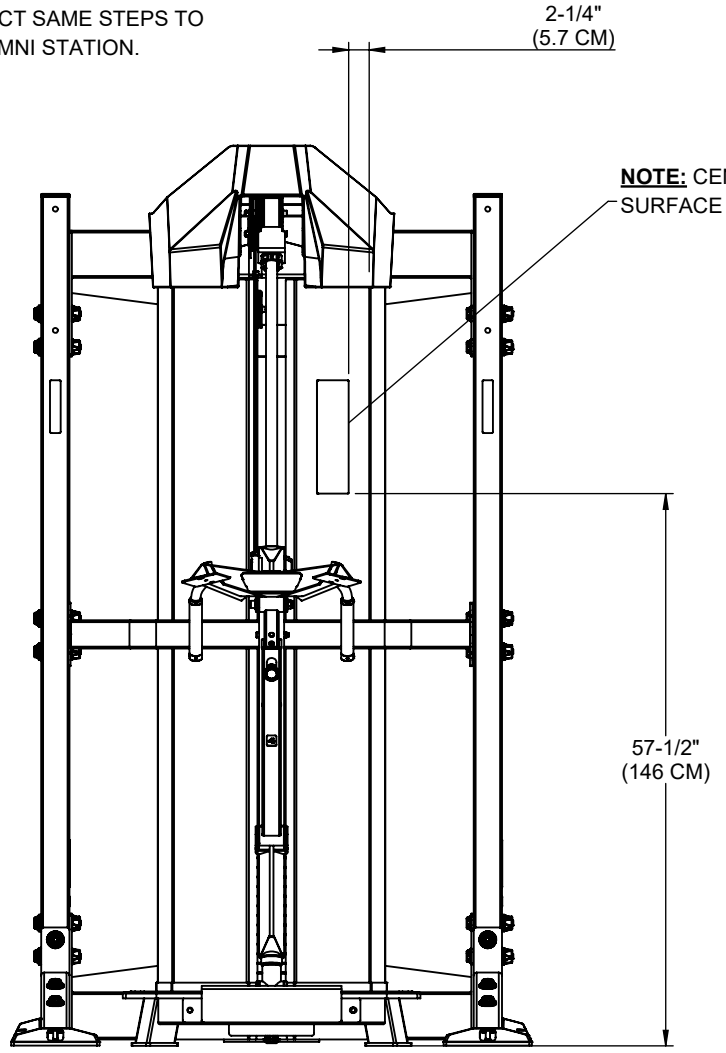

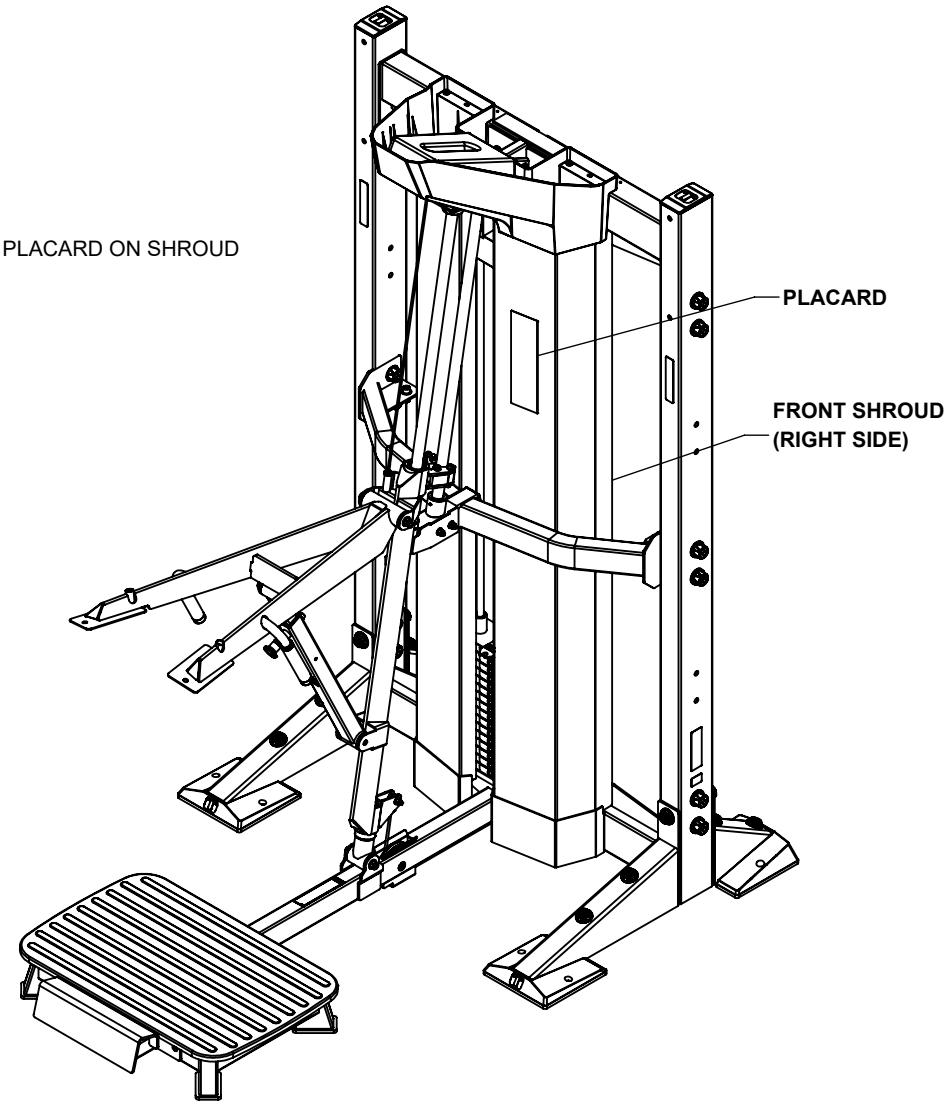

STEP 28
4' MODULE / OMNI STATION

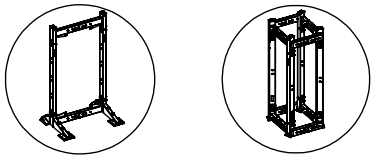

NOTE: 4' MODULE ASSEMBLY IS SHOWN. FOLLOW THE EXACT SAME STEPS TO ASSEMBLE THE OMNI STATION.

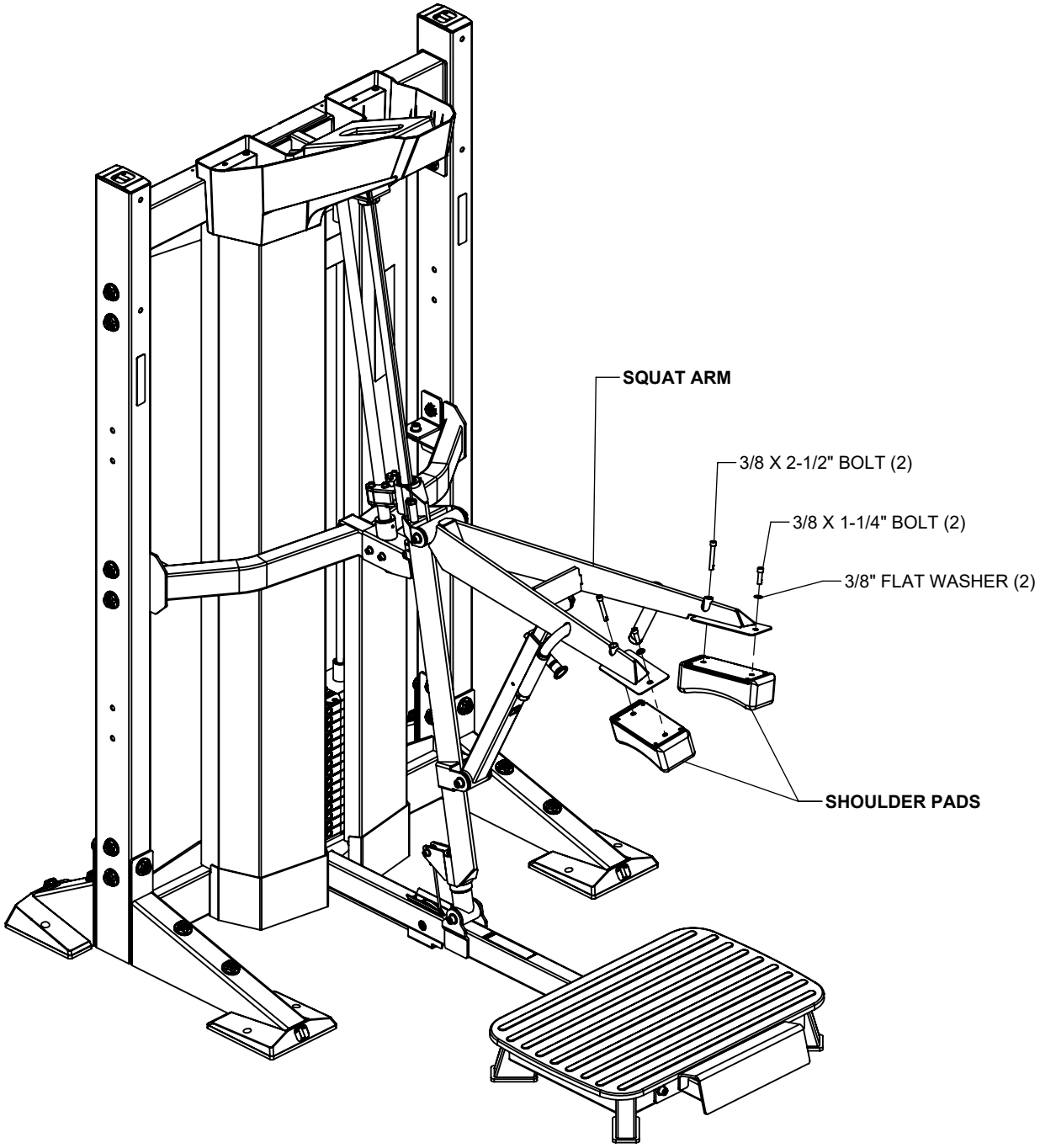

NOTES:

SECURELY tighten bolt connections in this step.

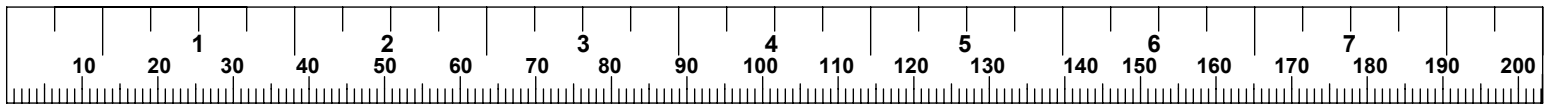

STEP 29 (OPTIONAL REAR SHROUD)
4' MODULE

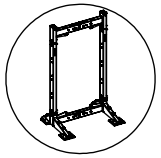

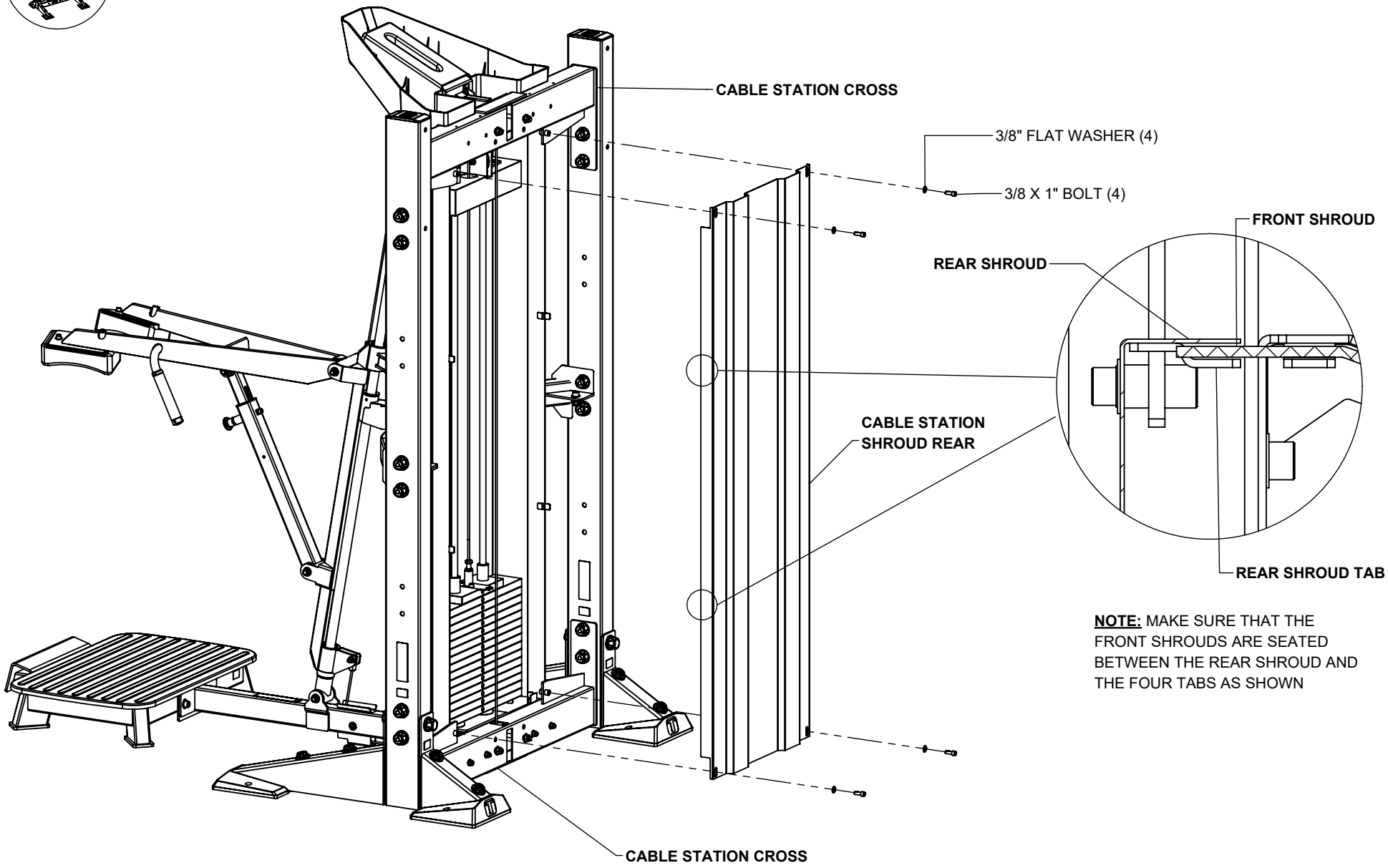

NOTE: MAKE SURE THAT THE FRONT SHROUDS ARE SEATED BETWEEN THE REAR SHROUD AND THE FOUR TABS AS SHOWN

MAINTENANCE

INSPECTION: Once a month, check for loose bolts. Tighten if necessary.

WEIGHT STACK GUIDE RODS, PIVOTING JOINTS, AND TUBE IN TUBE ADJUSTMENTS: At least once a month, Clean and lubricate with a silicone or teflon based lubricant.

GUIDE RODS WITH LINEAR BEARINGS: At least once a month, Clean and lubricate with a thin film of NLGI 1 or NLGI 2 Grease (non-Moly / non-PTFE). Examples include *Lucas Oil White Lithium Grease* and *Mobil 122136 EP 2.*

CABLES: Check tension, end fitting and cable coating. Replace if damage or worn. (NOTE: NEW CABLES ALWAYS STRETCH DURING USE. REFER TO STEP 23 TO ADJUST CABLE TENSION)

UPHOLSTERY: Wipe down and dry after each use. Clean and condition periodically.

SPRING PINS: Check that spring pin fully engages the hole when released. Tighten spring pin nut as needed.

FRAME: Clean with a damp cloth.

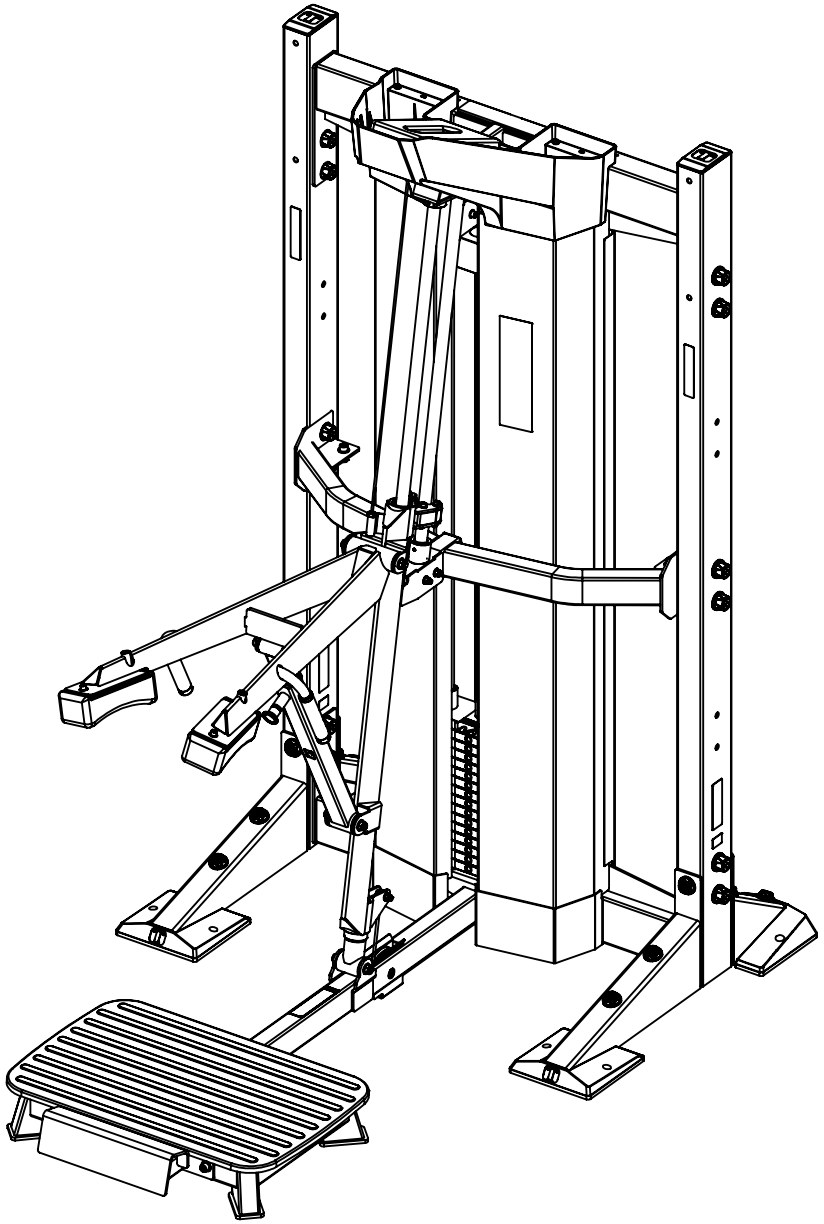

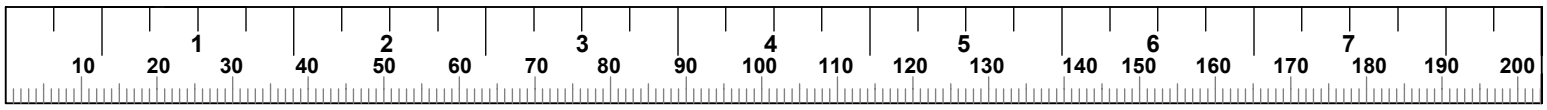

XCREATE-4SQUATM

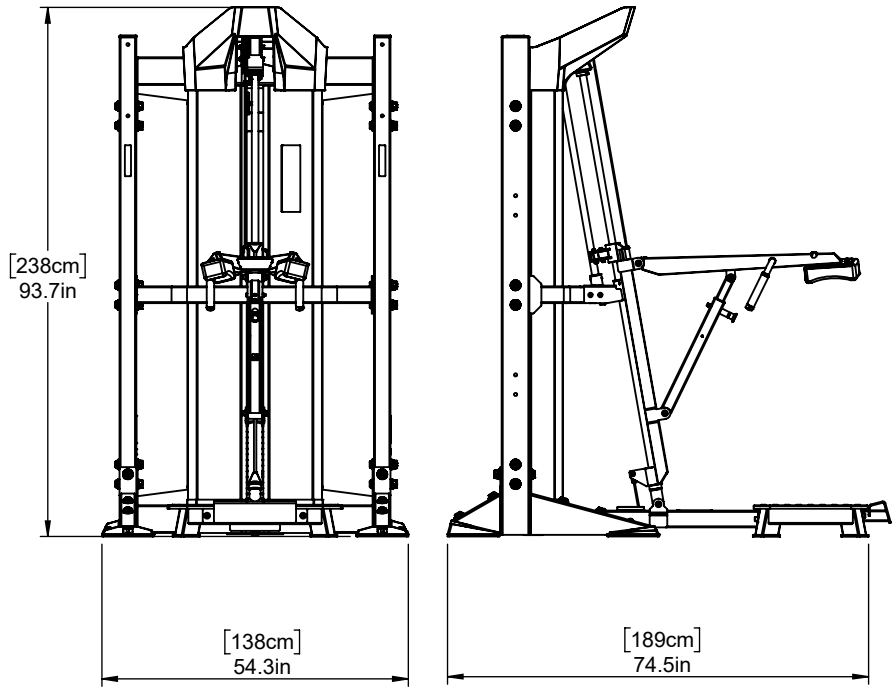

TOTAL UNIT WEIGHT : 930 LBS [422 KG]

XCREATE-OSS-SQUAT

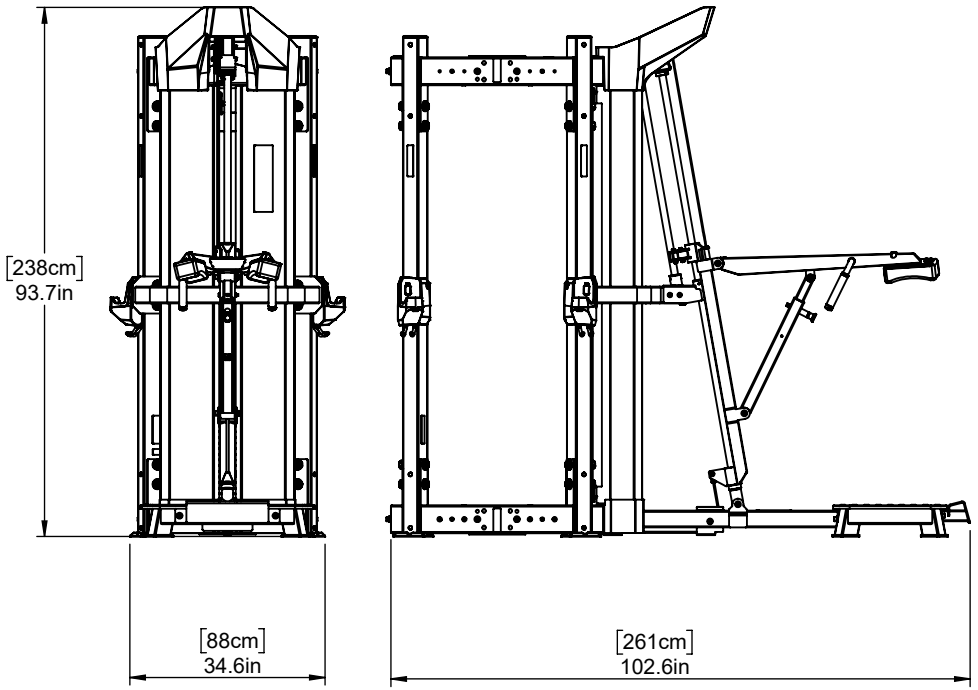

TOTAL UNIT WEIGHT : 1000 LBS [454 KG]

TOP VIEW

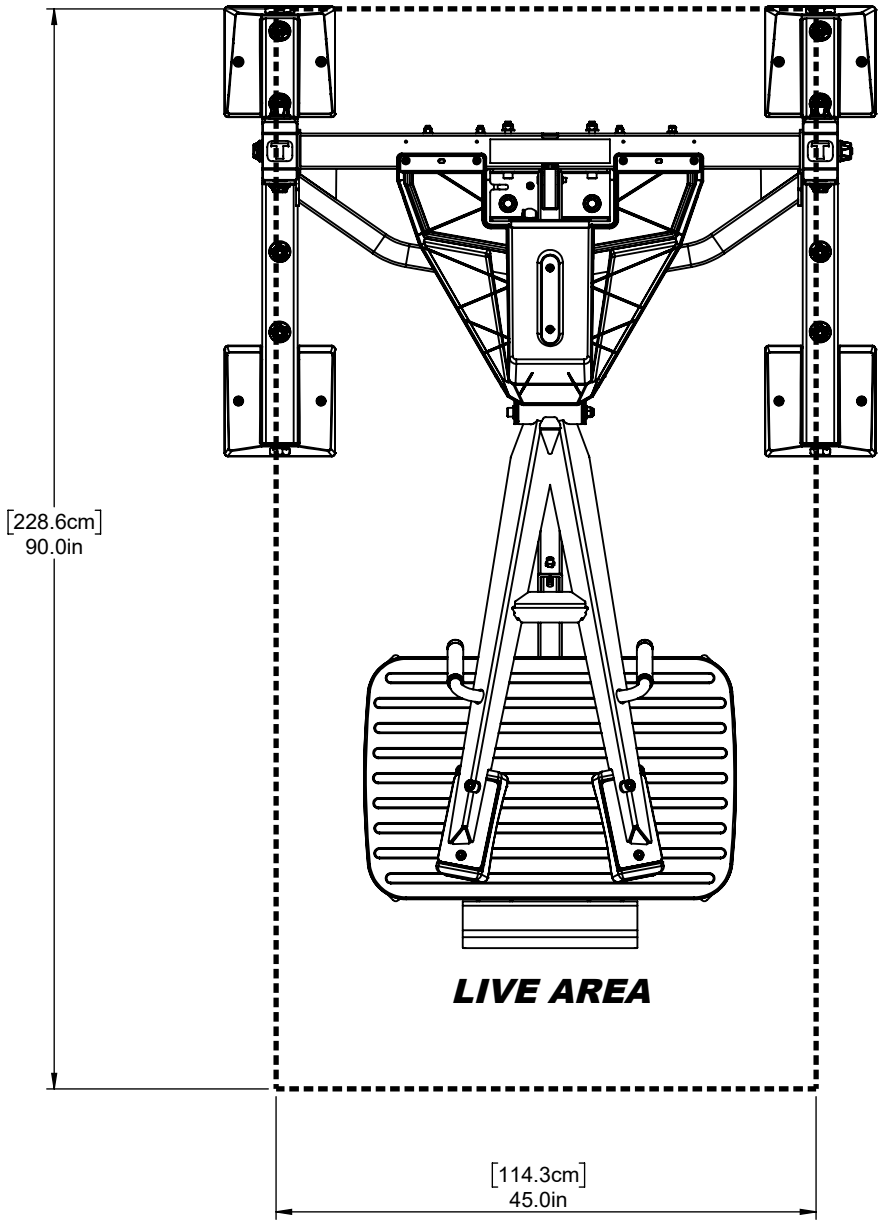


SQUAT /
CALF RAISE
SQUAT START
SQUAT FINISH
CALF RAISE
TORQUE USA